AUSTRON INC. P.O. BOX 14766 - EXIT 248, N. IH 35, AUSTIN, TEXAS 78761 (512) 251-2341 TWX 910/874-1356

AUSTRON MODEL 1210D SERIES PORTABLE CRYSTAL CLOCK

OPERATION AND MAINTENANCE

JUNE, 1983

P/N 1279 6207

AUSTRON INC.

WARRANTY

AUSTRON, Inc., of Austin, Texas, warrants, for one year after delivery, to the original purchaser of any product manufactured by AUSTRON, that same shall be free of defects in material and workmanship. Obligation under this warranty shall be limited to repair or replacement, at AUSTRON's discretion, of any product or part thereof which has been returned by the original purchaser with transportation prepaid, and upon examination by AUSTRON, is found to be defective. AUSTRON assumes no responsibility for loss or damage to equipment being returned for repair or replacement under the terms of this warranty.

For this warranty to be effective, the purchaser agrees that the equipment will be properly installed and maintained. Equipment which, upon examination by AUSTRON, requires repair or replacement of parts thereof as a result of improper installation, misuse, unauthorized alterations or repairs, or user negligence, such repairs or replacement of parts thereof will be made at cost.

AUSTRON makes no representation or warranty of any kind, either expressed or implied, with respect to equipment operation and procedures. Any action that the user may take in reliance upon the operation or accuracy of this equipment shall be taken solely upon the user's own responsibility and risk.

AUSTRON shall not be liable for consequential damages to purchaser, user, or any others resulting from the possession or use of this equipment.

Prior to return of a product under terms of this warranty, AUSTRON, Inc., Austin, Texas, is to be notified. Notification is to include the Model Number and Serial Number of the product and full details of the problem.

TABLE OF CONTENTS

Section	Title	Page
1.0	GENERAL DESCRIPTION	1-1
1.1	SCOPE OF SECTION	1-1
1.2	PURPOSE OF EQUIPMENT	1-1
1.3	SPECIFICATIONS OF EQUIPMENT	1-2
1.4	CONTROLS, INDICATORS, AND CONNECTORS	1-4
2.0	INSTALLATION	2-1
2.1	SCOPE OF SECTION	2-1
2.2	UNPACKING AND INSPECTION	2-1
2.3	OPERATIONAL INSTALLATION	2-2
2.4	PREPARATION FOR RESHIPMENT	2-2
3.0	OPERATION INSTRUCTIONS	3-1
3.1	SCOPE OF SECTION	3-1
3.2	SET-UP AND TURN-ON PROCEDURES	3-1
3.3	TIME SYNCHRONIZATION	3-2
3.4	TIME DISPLAY SYNCHRONIZATION	3-4
4.0	FUNCTIONAL DESCRIPTION	4-1
4.1	SCOPE OF SECTION	4-1
4.2	GENERAL CIRCUIT DESCRIPTION	4-2
4.3	+15 VOLT REGULATOR	4-4
4.4	+5 VOLT DC REGULATOR	4-5
4.5	SINE CONVERTER	4-6
4.6	OUTPUT AMPLIFIERS	4-7
4.7	TIME SYNC	4-8
4.8	DIVIDER CARD	4-9
4.9	PULSE AMPLIFIER CARD	4-10
4.10	TOD CONTROL AND DISPLAY	4-11
4.11	INTERNAL OSCILLATOR	4-13

AUSTRON MODEL 1210D PORTABLE CRYSTAL CLOCK

TABLE OF CONTENTS (Cont'd.)

Section	Title	Page
5.0	MAINTENANCE	5-1
5.1	SCOPE OF SECTION	5-1
5.2	TROUBLE ANALYSIS GUIDES	5-1
5.3	GENERAL MAINTENANCE	5-4
6.0	REPLACEABLE PARTS	6-1
6.1	SCOPE OF SECTION	6-1
6.2	ORDERING REPLACEMENT PARTS	6-1
7.0	OPTIONAL ASSEMBLIES	7-1
7.1	SCOPE OF SECTION	7-1
7.2	LIST OF OPTIONAL ASSEMBLIES	7-1
7.3	MODEL 1210D-01 PORTABLE CRYSTAL CLOCK	7-3
7.4	MODEL 1210D-02 PORTABLE CRYSTAL CLOCK	7-4
7.5	MODEL 1210D-03 PORTABLE CRYSTAL CLOCK	7-8

AUSTRON MODEL 1210D PORTABLE CRYSTAL CLOCK

LIST OF ILLUSTRATIONS

Section	Title	Figure No.
1.0	FRONT AND REAR PANEL CONTROLS (12496783)	1-1
4.0	BLOCK DIAGRAM 1210D CRYSTAL CLOCK (12496793) . . .	4-1
	SCHEMATIC, 1210D CRYSTAL CLOCK (12396154)	4-2
	PCB ASSY., BRIDGE-A7 (10394664)	4-3
	TOP VIEW, 1210D CRYSTAL CLOCK (12496787)	4-4
	BOTTOM VIEW, 1210D CRYSTAL CLOCK (12496786) . . .	4-5
	PCB ASSY., DC FILTER-A11 (10396200)	4-6
	PCB ASSY., OUTPUT FILTER-A3 (10396735)	4-7
	SCHEMATIC, +15 VDC REGULATOR-A17 (12396784) . . .	4-8
	PCB ASSY., +15 VDC REGULATOR-A17 (10396197) . . .	4-9
	SCHEMATIC, +5 VDC REGULATOR (12394684)	4-10
	PCB ASSY., +5 VDC REGULATOR (10394607)	4-11
	SCHEMATIC, SINE CONVERTER (12396096)	4-12
	PCB ASSY., SINE CONVERTER (10396025)	4-13
	SCHEMATIC, OUTPUT AMPLIFIER (12396098)	4-14
	PCB ASSY., OUTPUT AMPLIFIER (10396031)	4-15
	SCHEMATIC, TIME SYNC (12394686)	4-16
	PCB ASSY., TIME SYNC (10394618)	4-17
	SCHEMATIC, DIVIDER (12394679)	4-18
	PCB ASSY., DIVIDER (10394604)	4-19
	SCHEMATIC, PULSE AMPLIFIER (12394695)	4-20
	PCB ASSY., PULSE AMPLIFIER (10394595)	4-21
	SCHEMATIC, TOD CONTROL/DISPLAY (12396189)	4-22
	PCB ASSY., TOD CONTROL (10396188)	4-23
	PCB ASSY., TOD DISPLAY (10396186)	4-24

LIST OF ILLUSTRATIONS (Cont'd.)

Section	Title	Figure No.
7.0	FRONT PANEL (00996192)	7-1
	SCHEMATIC, 1210D-01 CRYSTAL CLOCK (12396570)	7-2
	BLOCK DIAGRAM, 1210D-01 CRYSTAL CLOCK (12496555) . .	7-3
	PCB ASSY., FINAL FILTER (10397355)	7-4
	SCHEMATIC, 100 KHZ OUTPUT AMPLIFIER (12397357) . . .	7-5
	PCB ASSY., 100 KHZ OUTPUT AMPLIFIER (10397359) . . .	7-6
	SCHEMATIC, 10, 5, 1, MHZ OUTPUT AMPLIFIER (12397364)	7-7
	PCB ASSY., 10, 5, 1, MHZ OUTPUT AMPLIFIER (10397342)	7-8
	BLOCK DIAGRAM, 1210D-02 CRYSTAL CLOCK (12496556) . .	7-9
	SCHEMATIC, 1210D-02 CRYSTAL CLOCK (12396571)	7-10
	SCHEMATIC, 60 HZ SINE CONVERTER (12396518)	7-11
	PCB ASSY., 60 HZ SINE CONVERTER (10396517)	7-12
	BLOCK DIAGRAM, 1210D-03 CRYSTAL CLOCK (12496625) . .	7-13
	SCHEMATIC, 1210D-03 CRYSTAL CLOCK (12396624)	7-14
	SCHEMATIC, DIVIDER (12396615).	7-15
	PCB ASSY., DIVIDER (10396614).	7-16

AUSTRON MODEL 1210D PORTABLE CRYSTAL CLOCK

1.0 GENERAL DESCRIPTION

1.1 SCOPE OF SECTION

1.1.1 This section introduces the AUSTRON Model 1210D Portable Crystal Clock. Provided here are descriptions of the equipment, operating controls, and indicators (see figure 1-1).

1.2 PURPOSE OF EQUIPMENT

1.2.1 The AUSTRON Model 1210D Clock is a compact self-contained time reference providing stable time outputs at several pulse frequencies. The timing of the output pulse can be varied over a wide range by means of a digital phase shifter, which has a resolution of 0.2 microseconds. In addition to the pulse output, the model 1210D has sinusoidal outputs. Thus, the model 1210D clock can be used to transfer time from one geographical location to another. A digital time display is also provided.

1.2.2 The case is approximately 8 1/2 inches high, 8 1/2 inches wide and 14 inches long, which facilitates portability. This case size permits upright storage under the type of passenger seat found on most commercial aircraft.

1.2.3 The AUSTRON Model 1210D Clock operates from a source of 115/230 V ac , or from 24 V dc to 28 V dc, $\pm$ 2 V dc. An internal battery pack will operate the clock for a period in excess of eight hours.

1.2.4 The AUSTRON Model 1210D utilizes high quality silicon semiconductors and integrated circuit assemblies. All resistors, capacitors, and hardware are chosen for high reliability, and where practical, to meet military requirements.

1.3 SPECIFICATIONS OF EQUIPMENT

1.3.1 The AUSTRON Model 1210D Portable Crystal Clock consists of an AUSTRON Model 1150 Crystal Oscillator, a series of dividers, a digital phase shifter, and output amplifiers which are powered by a supply (which has a voltage regulator and standby batteries). The following paragraphs provide specific information on the model 1210D.

1.3.1.1 Physical Specifications

Height:	8 1/2 inches (216 mm)
Width:	8 1/2 inches (216 mm)
Length:	15 inches (381 mm)
Weight:	22 pounds

1.3.1.2 Electrical Specifications

Input AC Voltage:	115/230 V ac ± 10% 48 - 420 Hz
Input DC Voltage:	24 - 28 V dc ± 2 V dc
Standby:	Internal Nicad battery pack provides at least eight hours of operation.
Battery Recharge:	14 to 16 hours.

1.3.1.3 Operating Specifications

Sinusoidal Outputs	
Frequency:	5 MHz and 1 MHz
Level:	1 VRMS -20 +50% into 50 ohms
Harmonic Distortion:	30 dB from rated output
Spurious Signals:	60 dB from rated output
Pulse Outputs	
Rate:	1 PPS
Amplitude:	+ 5 V peak minimum into 50 ohms
Width:	5 - 25 microseconds at the 50% amplitude points
Jitter:	Less than 50 nanoseconds

1.3.1.3 (Cont'd.)

**Frequency Change with Temperature:	Less than $\pm$ 2 X 10^{-10} over a temperature range of 0°C to 35°C.
Operating Temperature Range:	0°C to +50°C (35°C on High Charge).
Storage Temperature Range:	-40°C to +85°C.

**Performance of the timing outputs under various ambient conditions can be computed from the following relationship:

$\Delta\tau = 8.64 \frac{\Delta F}{F} T + 4.32KT^2$; where

$\Delta\tau$ = time gained or lost (microseconds)

$\frac{\Delta F}{F}$ = frequency offset in parts in 10^{-10}

T = time in days

k = drift rate of the oscillator expressed in parts 10^{-10}

1.4 CONTROLS, INDICATORS, AND CONNECTORS

1.4.1 Figure 1-1 shows all panel controls, indicators, and connectors for the model 1210D. Specific information is provided in the following paragraphs.

1.4.1.1 Front Panel

REFERENCE	DESCRIPTION	FUNCTION
S10	Power ON/OFF	Disconnects both ac and battery power from clock. (Note: Placing the power switch in the "off" position will stop the clock, even if it was operating from its internal battery power source.)
DS3	Power Lamp	Indicates ac operation.
S11	Charge HI/LOW Switch	Selects the rate at which the internal batteries are to be charged.
DS4	Charge Lamp	Indicates the internal batteries are charging at the high rate.
J1	EXTernal SYNC Connector	BNC connector accepts an external synchronizing pulse.
J2	5 MHz Output Connector	BNC connector provides 5 MHz sinusoidal output.
J3	1 MHz Output Connector	BNC connector provides 1 MHz sinusoidal output.
J4	1 MHz Output Connector	BNC connector provides 1 MHz sinusoidal output.

REVISIONS				
ZONE	LTR	DESCRIPTION	DATE	APPD
	—	RELEASED	2-1-78	RDB
	A	COMBINED WITH 124 96785 PER ECO # 2251	2-15-78	RDB

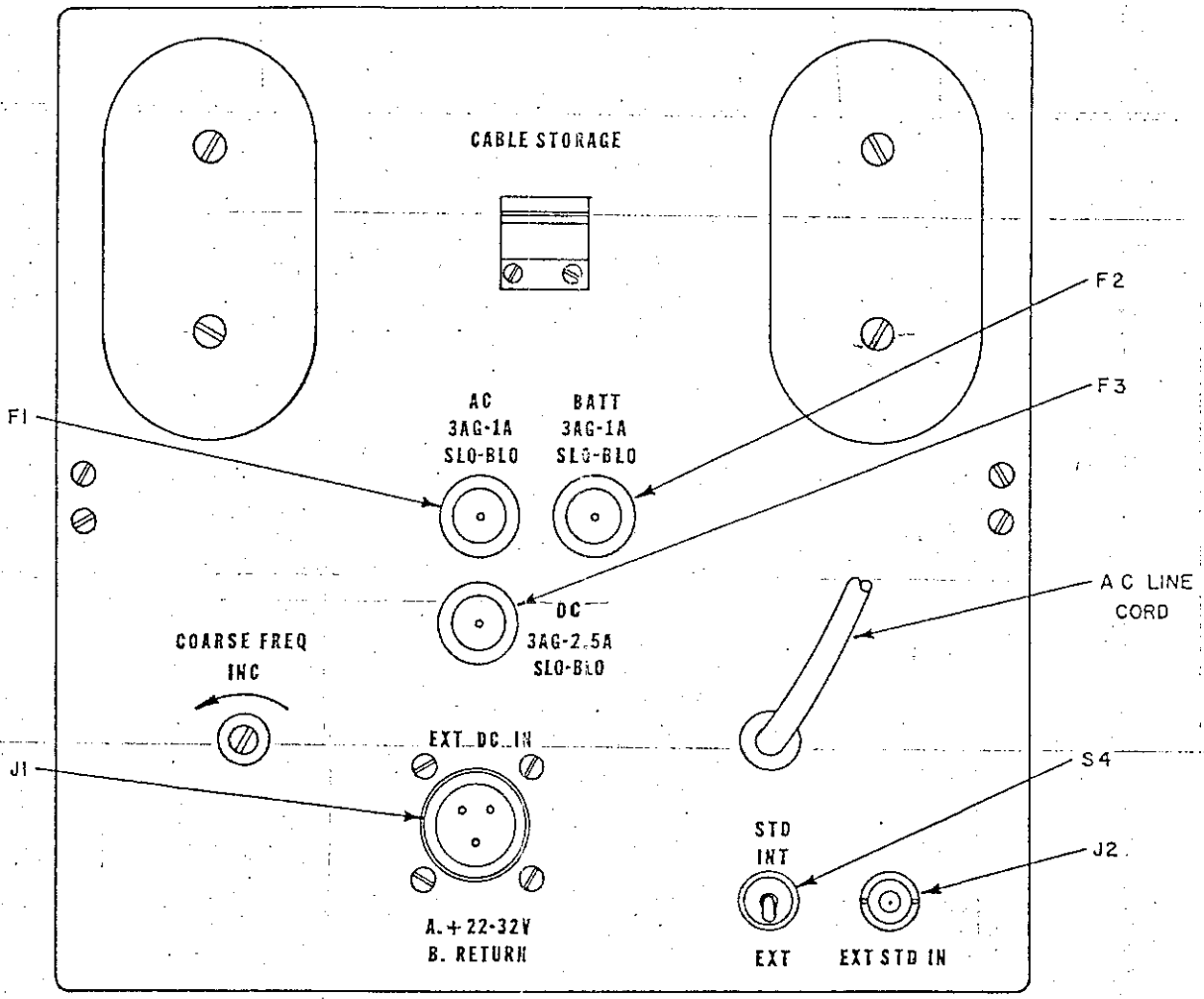

REAR PANEL (1A10)

1A2 / 1A10	1-1
REF DES	FIG NO

ATION

TOLERANCES
UNLESS OTHERWISE SPECIFIED

DECIMALS	FRACTIONS	ANGLES

MATERIAL:

ENGR	B. FRANCIS	2/1/78
CHECK		
DRFTSMN	BARKER	10-3-75

AUSTRON INC.
AUSTIN, TEXAS

FRONT AND REAR PANEL CONTROLS - MODEL 1210D

SIZE	CODE IDENT NO		
3	24672	124 96783	A

SCALE 1:1 SHEET OF

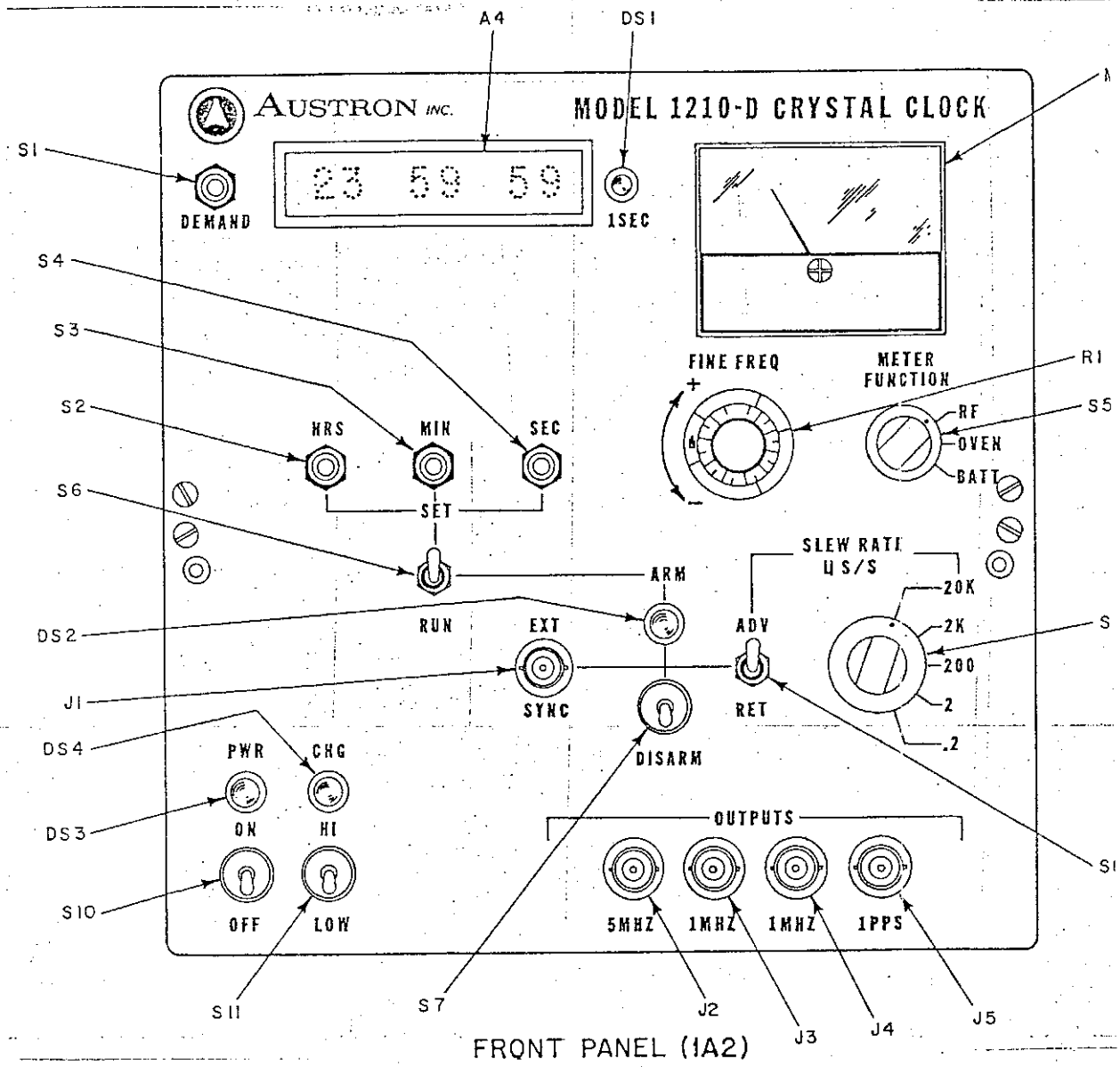

FRONT PANEL (1A2)

127 96207	1210D
NEXT ASSY	USED
	APPL

1.4.1.1 (Cont'd.)

REFERENCE	DESCRIPTION	FUNCTION
J5	1 PPS Output Connector	BNC connector provides one pulse-per-second output.
S5 and M1	METER FUNCTION Switch and Meter	Three-position rotary switch selects, one of the following functions for display on meter: RF - The oscillator bias of the internal frequency standard OVEN - Oven of the internal frequency standard BATT - Voltage of the internal battery pack
R1	FINE FREQuency Control	Ten-turn precision potentiometer to accurately adjust the frequency of the internal oscillator. This control may be calibrated by dividing the electrical tuning range of the oscillator by 10^3.
S8	ADVance/RETard Slew Rate	Two-position toggle switch which advances or retards the timing pulse at a rate selected by the SLEW RATE switch, S9.
S9	SLEW RATE Switch	Five-position rotary switch which selects the rate (in microseconds/second) which the digital phase shifter slews.

1.4.1.1 (Cont'd.)

REFERENCE	DESCRIPTION	FUNCTION
S7	ARM/DISARM Switch	Toggle switch which enables the clock sync and time setting functions.
DS2	ARM Lamp	This lamp being lit indicates that the clock is ARMED and the timing of its output pulse may be changed, or the HRS, MIN, or SEC display may be set by the appropriate pushbutton controls.
S6	SET/RUN Switch	Toggle switch which halts the clock register and allows updating in the SET position, or allows the clock register to accumulate time in the RUN position.
S1	DEMAND Switch	Pushbutton switch which forces the clock register to display time for about eight seconds when the ac input is absent. (Note that the time display is continuous when the ac input is present.)
DS1	1 SECond Indicator	Indicator which flashes once per second when the clock register is accumulating time.
S2	HRS SET Switch	Pushbutton switch which advances the hours clock register when the clock is in the SET mode.

1.4.1.1 (Cont'd.)

REFERENCE	DESCRIPTION	FUNCTION
S3	MIN SET Switch	Pushbutton switch which advances the minutes clock register when the clock is in the SET mode.
S4	SEC SET Switch	Pushbutton switch which advances the seconds clock register when the clock is in the SET mode.
A4	Time Display Assembly	Indicates the time-of-day in hours, minutes, and seconds.

1.4.1.2 Rear Panel

REFERENCE	DESCRIPTION	FUNCTION
	COARSE FREQuency Adjustment	Access hole to allow for adjustment of the frequency at the internal frequency standard.
F1	AC Fuse	Type 3AG - 1A SLO-BLO fuse provides ac power supply protection.
F2	Battery Pack Fuse	Type 3AG - 1A SLO-BLO fuse provides protection for the internal battery pack.
F3	DC Fuse	Type 3AG - 2.5A SLO-BLO fuse provides protection for the DC standby input.
J2	EXTernal STanDard INput	BNC connector accepts external 5 MHz sine wave input with an amplitude of at least 1 V RMS into a 50 ohm load.

1.4.1.2 (Cont'd.)

REFERENCE	DESCRIPTION	FUNCTION
S4	INTernal/EXTernal STanDard Switch	Toggle switch selects operation from either internal frequency standard, or from an external 5 MHz frequency standard.

2.0 INSTALLATION

2.1 SCOPE OF SECTION

2.1.1 This section describes the steps required to prepare the AUSTRON Model 1210D Portable Crystal Clock for operation or reshipment to another location. Included in this section are instructions for unpacking, inspection, and shipping, along with lists of fundamental electrical requirements and accessories.

2.2 UNPACKING AND INSPECTION

2.2.1 Initial Inspection -- Immediately report any equipment damage to the carrier making delivery and to AUSTRON, Inc. Before applying power to the unit, visually inspect internal components and circuit boards by removing the top cover. Examine exterior and interior parts carefully for scratches, dents, damaged printed circuit boards, etc., which might indicate improper handling.

2.2.2 Circuit Boards -- Exercise care when removing or installing printed circuit boards. The recommended installation procedure is to align the board contacts with the connector, and then carefully insert the board as far as it will go.

NOTE: COMPONENT SIDE IS TOWARDS THE FRONT.

CAUTION: ALWAYS TURN POWER OFF BEFORE REMOVING OR INSTALLING ANY PRINTED CIRCUITS OR INTEGRATED CIRCUITS.

2.3 OPERATIONAL INSTALLATION

2.3.1 Accessories -- The following accessories should be received with the model 1210D:

a) One MS type mating dc power connector.
b) One cable clamp for MS type connector.
c) Two sets of spare fuses.
d) Two technical manuals.
e) One pcb extender card.

2.3.2 Power Connections -- This unit operates on 115 V ac or 230 V ac ± 10%, 48-420 Hz. Before connecting the ac power cable to the source, verify that the 115/230 volt selector switch (located on the top of the power transformer) is in the required position (115 V or 230 V), and that fuse F1 is 1 amp SLO-BLO 3 AG for 115 V operation of 0.5 amp SLO-BLO 3 AG for 230 V operation.

2.3.3 Cable Connections -- With the MS type connector supplied, fabricate a cable to supply the dc standby power. The connections are as follows:

PIN	DESCRIPTION
A	24 - 28 V dc ± 2 V dc
B	Return
C	No Connection

2.4 PREPARATION FOR RESHIPMENT

2.4.1 Turn power off and disconnect all external cables. Check to see that all mounted components are in place and secure, and that all printed circuit boards are snugly inserted in their respective connectors.

CAUTION: IF SHIPMENT OR STORAGE DURATION OF GREATER THAN THIRTY (30) DAYS OR STORAGE TEMPERATURES OUTSIDE THE RANGE OF MINUS FORTY DEGREES (-40°) CENTIGRADE TO PLUS FIFTY DEGREES (+50°) CENTIGRADE IS ANTICIPATED, THE NICAD BATTERIES SHOULD BE REMOVED BY A QUALIFIED TECHNICIAN.

2.4.2 Use the original packing material for shipping, if possible. If not, enclose the unit in a suitable water and vapor proof plastic bag. Projections and sharp edges should be padded with a cushioning material. Heat seal or tape the plastic bag to ensure a moistureproof enclosure. When sealing the bag, keep the trapped air volume to a practical minimum.

2.4.3 Place the unit in a interior box of such dimensions that will not allow movement. Place the interior box in a shipping container of such dimensions that will allow for at least two inches of rubberized hair (or similar material) on all sides of the interior box.

3.0 OPERATION INSTRUCTIONS

3.1 SCOPE OF SECTION

3.1.1 This section provides instructions for operating the AUSTRON Model 1210D Portable Crystal Clock. Included are general descriptions of set-up, check out, and adjustment.

3.2 SET-UP AND TURN-ON PROCEDURES

3.2.1 After installing the model 1210D per section 2.3, place the power switch (1A2S10) in the ON position (up). Verify that the PWR lamp (1A2DS3) is lighted, indicating ac operation. The digital time display should light.

3.2.2 Position the METER FUNCTION switch (1A2S5) as indicated, and verify the following:

a) RF - a reading above 30.

b) OVEN - an initial reading below 15. This reading will increase between 35 and 65 as the oscillator oven stabilizes.

3.2.3 Position the METER FUNCTION switch in the BATT position, and disconnect the ac and dc power cords. Note that the PWR lamp (1A2DS3) is off, and there should be no significant change in the meter reading. Reinsert the ac power cord, and verify that the PWR lamp is on. Place the CHARGE rate switch (1A2S11) in the HI position. Verify that the CHG lamp (1A2DS4) is on, and that the meter shows a slight movement up-scale. Place the CHG switch in the LOW position.

3.2.4 At this point in the operating procedure a 3 hour delay is necessary in order to allow the internal oscillator time to warm-up. In the interim, the following procedure may be performed to verify the complete operation of the clock controls and outputs:

3.2.4.1 Check the 5 MHz and 1 MHz sine outputs and the 1 PPS pulse output with an oscilloscope. These outputs should conform to the specifications listed in paragraph 1.3.

3.2.4.2 Place the ARM/DISARM switch (1A2S7) in the ARM (up) position. Verify that the ARM lamp (1A2DS2) lights. Place the ARM/DISARM switch in the DISARM (down) position. Verify that the ARM lamp extinguishes.

3.2.4.3 Arm the clock and place the clock SET/RUN switch (1A2S6) in the SET position. The digital display should hold the time being display. Place the clock SET/RUN switch in the RUN position. Verify that the seconds increment. Disarm the clock by placing the ARM/DISARM switch in the DISARM position.

3.2.4.4 Verify the function of the EXT SYNC in the following manner. ARM the clock and apply a 1 PPS (+3V for 1 microsecond or greater) pulse to the EXT SYNC input (1A2J1). The ARM lamp should extinguish indicating that synchronization has occurred. Verify the synchronization by comparing the synchronizing pulse and clock output pulse. The pulses should be within 0.4 microseconds of each other.

3.2.5 Approximately 3 hours after turning the Model 1210D on, the frequency of the internal oscillator should be within the adjustment range of the front panel frequency control. Using a meter standard and the FINE FREQ control (1A2R1), adjust the internal oscillator of the model 1210D on frequency.

3.3 TIME SYNCHRONIZATION

3.3.1 The model 1210D clock may be synchronized with a master clock automatically or manually.

3.2.4 At this point in the operating procedure a 3 hour delay is necessary in order to allow the internal oscillator time to warm-up. In the interim, the following procedure may be performed to verify the complete operation of the clock controls and outputs:

3.2.4.1 Check the 5 MHz and 1 MHz sine outputs and the 1 PPS pulse output with an oscilloscope. These outputs should conform to the specifications listed in paragraph 1.3.

3.2.4.2 Place the ARM/DISARM switch (1A2S7) in the ARM (up) position. Verify that the ARM lamp (1A2DS2) lights. Place the ARM/DISARM switch in the DISARM (down) position. Verify that the ARM lamp extinguishes.

3.2.4.3 Arm the clock and place the clock SET/RUN switch (1A2S6) in the SET position. The digital display should hold the time being display. Place the clock SET/RUN switch in the RUN position. Verify that the seconds increment. Disarm the clock by placing the ARM/DISARM switch in the DISARM position.

3.2.4.4 Verify the function of the EXT SYNC in the following manner. ARM the clock and apply a 1 PPS (+3V for 1 microsecond or greater) pulse to the EXT SYNC input (1A2J1). The ARM lamp should extinguish indicating that synchronization has occurred. Verify the synchronization by comparing the synchronizing pulse and clock output pulse. The pulses should be within 0.4 microseconds of each other.

3.2.5 Approximately 3 hours after turning the Model 1210D on, the frequency of the internal oscillator should be within the adjustment range of the front panel frequency control. Using a meter standard and the FINE FREQ control (1A2R1), adjust the internal oscillator of the model 1210D on frequency.

3.3 TIME SYNCHRONIZATION

3.3.1 The model 1210D clock may be synchronized with a master clock automatically or manually.

3.3.1.1 Automatic Synchronization -- Automatic synchronization is accomplished by placing the ARM switch in the ARM (up) position. The red ARM lamp, located immediately above the ARM/DISARM switch, will light indicating that the clock is ready to receive a timing command. Next, connect the master timing pulse to the EXT SYNC BNC connector located on the front panel of the model 1210D clock. When the master timing pulse arrives, the clock will automatically synchronize to within 0.4 microsecond timing pulse. The ARM lamp will go out, indicating synchronization has taken place.

3.3.1.2 Manual Synchronization -- Manual synchronization is accomplished by using an oscilloscope, with a triggered sweep, as a comparator and aligning the clock with the master clock pulse as follows:

1) Trigger the sweep of the oscilloscope with the external master timing pulse.
2) Connect the 1 PPS output from the model 1210D to the vertical input of the oscilloscope. Set the vertical gain to 1 volt per division and the sweep rate to 0.1 second per division. The model 1210D clock output pulse should appear on the base line.
3) ARM the clock, and select a high slew rate by means of the SLEW RATE switch (1A2S9). The slew rates, shown on the righthand side of the selector switch, are expressed in microseconds per second.
4) Advance or retard the model 1210D clock output pulse at the rate selected, by means of the SLEW RATE ADV/RET switch (1A2S8). As the time difference decreases, select slower slew rates and faster sweep rates until the model 1210D is synchronized.
5) Disarm the clock.

3.4 TIME DISPLAY SYNCHRONIZATION

3.4.1 Alignment of the clock display to the master clock is done as follows:

1) Position the SET/RUN switch (1A2S6) to the SET position.
2) ARM the clock.
3) Using the HRS, MIN, or SEC pushbutton switches (1A2S2 - 1A2S4), advance the display to several seconds ahead of the desired display time.
4) When real time is in coincidence with the digital display, place the SET/RUN switch in the RUN position.
5) Disarm the clock.

3.5 BATTERY CHARGING

3.5.1 Due to the difficulty in determining the state of charge of the Nicad batteries, the following procedure is recommen-ed for recharging the cells:

1) Place the CHG switch on the HI position.
2) Compute the charging time using the following information:
   a) The clock draws approximately 420 ma when operating from the internal batteries.
   b) The batteries have a 7 ampere hour capacity.
   c) The HI charge rate is approximately 750 ma.
   d) Replace 1-1/2 times the ampere hours used.

3.5.2 The most important thing is to not allow the heat to build up during the charge cycle. Therefore, at frequent intervals during a prolonged charge cycle, the batteries should be tested with the back of the hand. If the batteries should become uncomfortable to the touch, the charge rate switch should be set to LOW until the batteries have cooled. The charge may then be resumed at the HI rate until the computed charge time is completed.

3.5.2 (Cont'd.)

NOTE: Nickel cadmium batteries have a memory. After repeated shallow discharge/charge cycles the batteries should be discharged to 1 volt per cell and then recharged 14 hours. This will restore the batteries to their maximum capacity.

4.0 FUNCTIONAL DESCRIPTION

4.1 SCOPE OF SECTION

4.1.1 This section provides a functional analysis of the Model 1210D Portable Crystal Clock. The clock consists of the circuits shown in the diagrams in Figures 4-1 and 4-2. Each circuit will be discussed separately in this section.

REVISIONS				
ZONE	LTR	DESCRIPTION	DATE	APPD
	—	RELEASED	10-9-75	

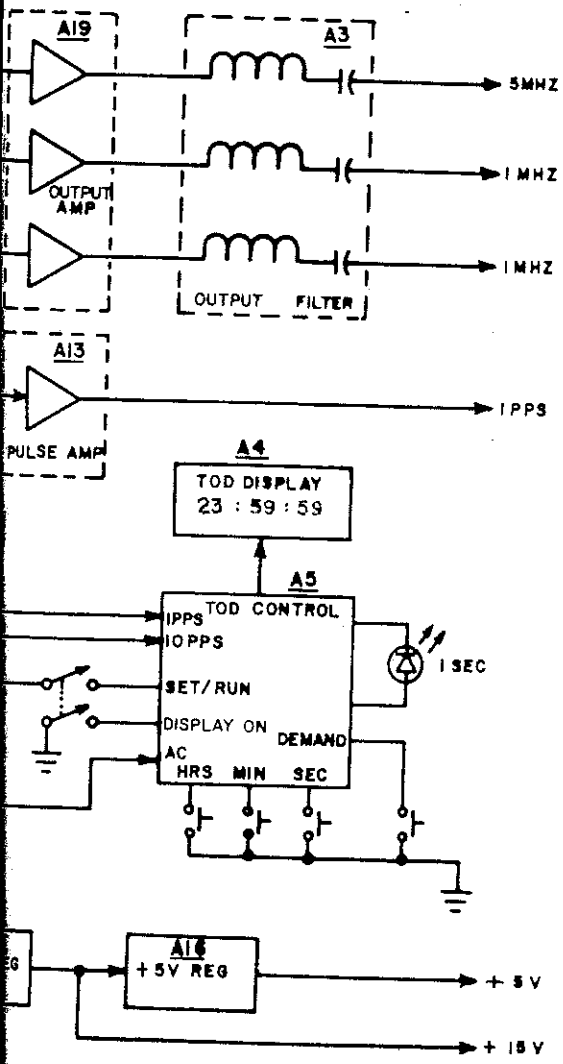

96207	1210D		4-1
EXT ASSY	USED ON	REF DES	FIG NO
APPLICATION			

TOLERANCES
UNLESS OTHERWISE SPECIFIED

DECIMALS	FRACTIONS	ANGLES

MATERIAL:

ENGR	L.L. ISERT, JR.	10-9-75
CHECK	R. BARKER	10-9-75
DRFTSMN	K. WIGGINTON	10-8-75

AUSTRON INC.
AUSTIN, TEXAS

BLOCK DIAGRAM - 1210D CRYSTAL CLOCK

SIZE	CODE IDENT NO	
3	24672	124 96793

SCALE N/A

SHEET 1 OF 1

4	3	2	1

REVISIONS		
ZONE	LTR	DESCRIPTION
	—	RELEASED

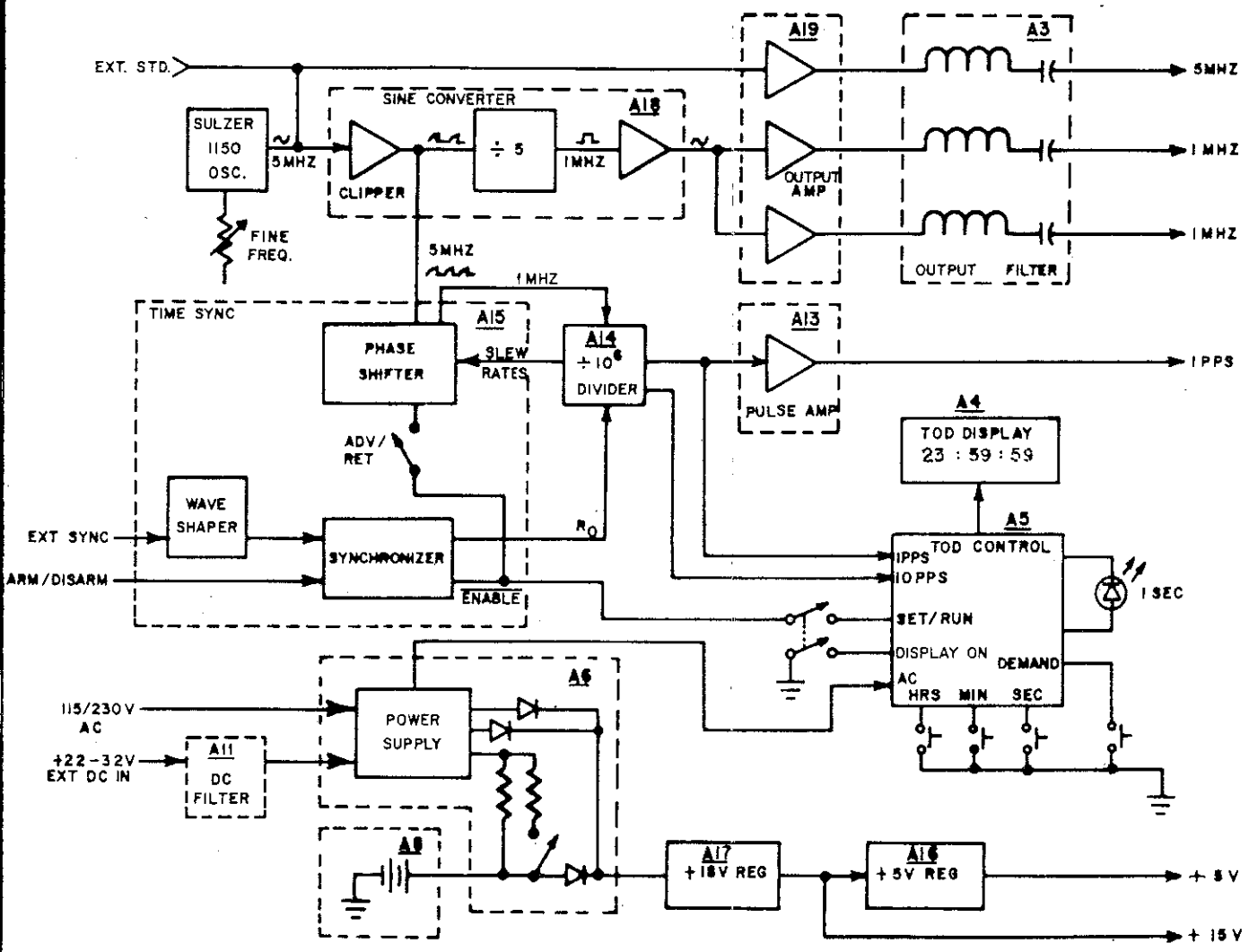

REVISIONS				
ZONE	LTR	DESCRIPTION	DATE	APPD
	—	RELEASED	10-9-75	RCE
C/D-2	A	DELETED A12R5; ADDED A12C2 PER ECO #1187	12-11-75	RDB
D-4	B	TI PIN 3 WAS TI PIN 2; ECO 2367	5-3-78	RDB

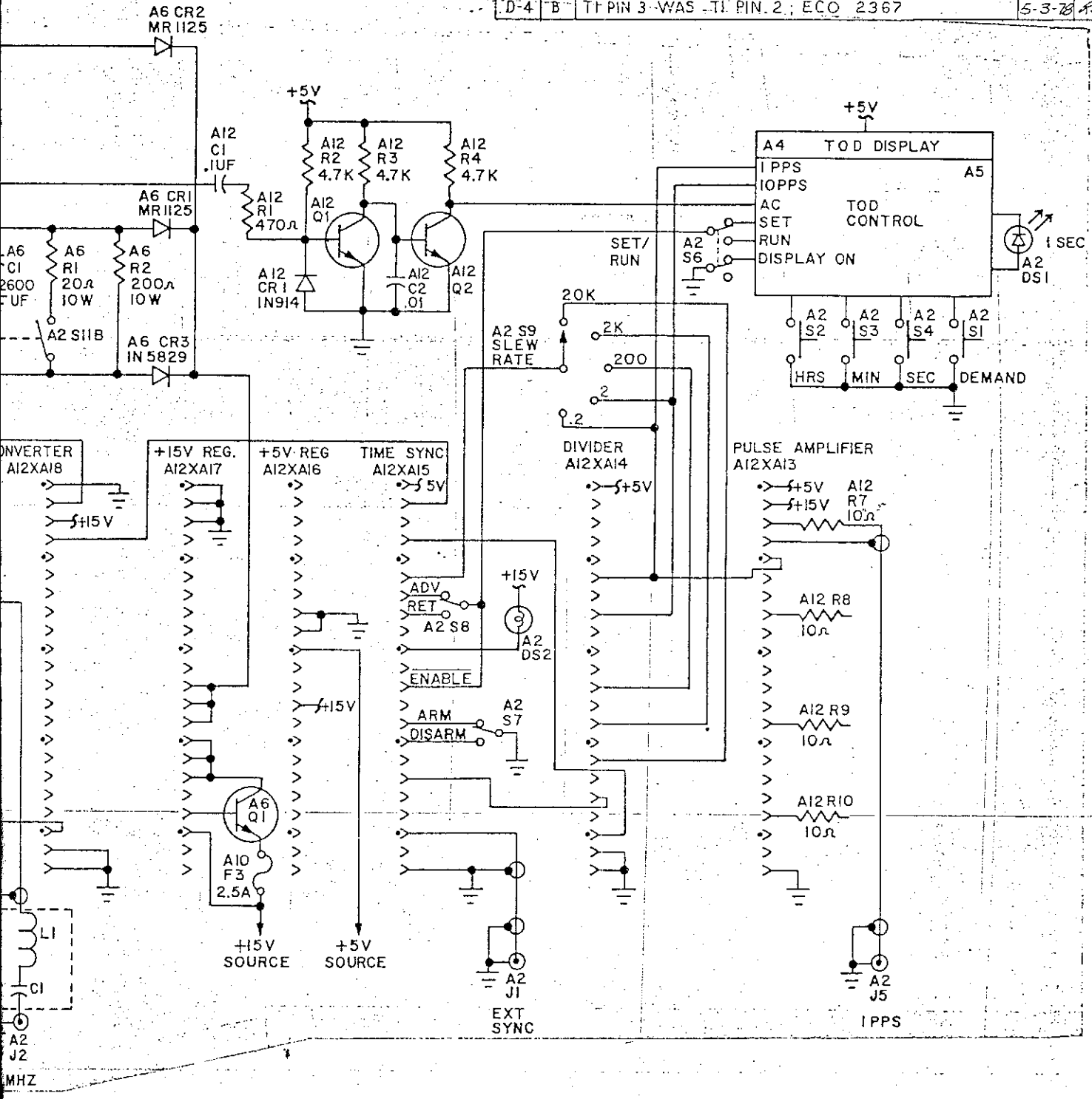

27 96209	1210D		4-2
NEXT ASSY	USED ON	REF DES	FIG NO
APPLICATION			

TOLERANCES
UNLESS OTHERWISE SPECIFIED

DECIMALS	FRACTIONS	ANGLES

MATERIAL:

ENGR	L.L. ISERT, JR.	10-9-75
CHECK	R. BARKER	10-9-75
DRFTSMN	J. WILEY	10-7-75

AUSTRON INC.
AUSTIN, TEXAS

SCHEMATIC DIAGRAM -
1210D CRYSTAL CLOCK

SIZE	CODE IDENT NO		
3	24672	123 96154	B

SCALE N/A | SHEET 1 OF 1

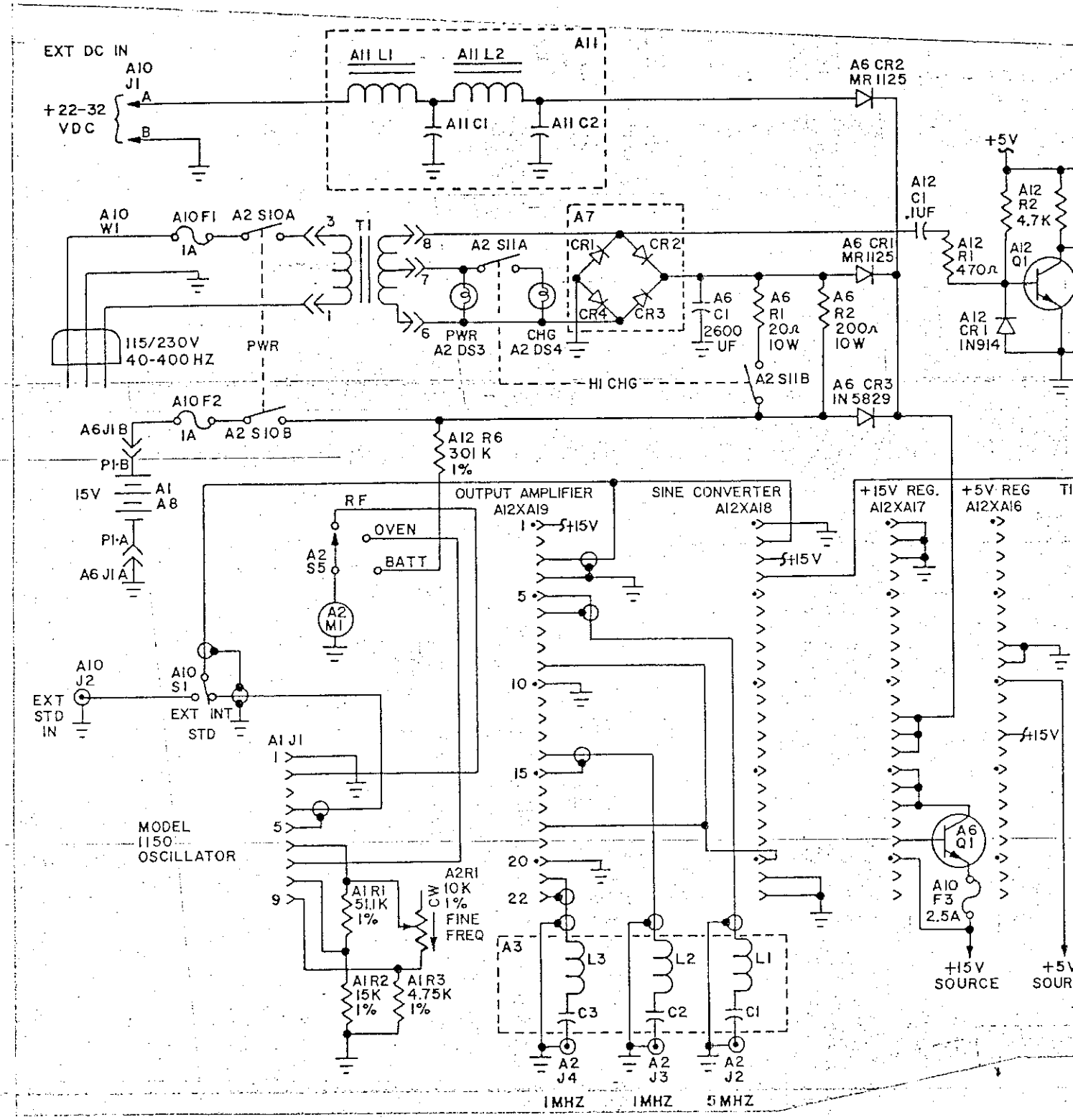

3. A6Q1 IS AN MJE 3055.

2. A12Q1 AND A12Q2 ARE 2N3904.

1. ALL RESISTORS 1/4W 10% UNLESS OTHERWISE SPECIFIED.

127 96209	12100		4-
NEXT ASSY	USED ON	REF DES	FIG
APPLICATION			

4.2 GENERAL CIRCUIT DESCRIPTION

4.2.1 The clock's overall functions are illustrated in Figure 4-1. A 5 MHz signal from either the internal AUSTRON Model 1150 Oscillator or an external standard is used as the timing for the clock. This signal is shaped and divided by the Sine Converter in order to supply the 5 MHz and 1 MHz sine outputs.

4.2.2 After conditioning by the Sine Converter, the 5 MHz signal is applied to the Time Sync circuits. These circuits convert the 5 MHz signal to a 1 MHz signal, which is in turn applied to the divider circuits to obtain the 1 PPS output. The 1 MHz generated in the Time Sync circuits may be phase shifted manually in accordance with the SLEW RATE and ADV/RET switches in order to slew the occurrence of the 1 PPS.

4.2.3 The output of the divider is used to generate time of day signals in the TOD Control and TOD Display circuits. An $\overline{\text{ENABLE}}$ signal generated in the Time Sync circuits allows the TOD Display to be set.

4.2.4 The power supply circuits are shown in detail on the chassis schematic Figure 4-2. AC power is obtained through the power transformer, T1, and rectified by the bridge consisting of 1A7CR1 - 1A7CR4.

4.2.5 Note that the bridge is located on a separate assembly, A7, which is shown in Figure 4-3. The output of the bridge is routed through either 1A6R1 and 1A6R2, or 1A6R2 to supply charging current for the Battery Pack, A8. 1A6CR1, 1A6CR2, and 1A6CR3 are connected as an "OR" circuit, so that either the ac power, EXT DC or batteries may supply the power to the +15 volt regulator, A17.

4.2.6 1A12Q1 and 1A12Q2 are used to detect ac power. The resultant TTL level signal is used in the TOD Control circuits.

APPLICATION		REVISIONS			
NEXT ASSY	USED ON	LTR	DESCRIPTION	DATE	APPROVED
221 94648	1210C	A	REVISED PER ECO #978		RDB
110 96211	1210D	B	REDRAWN TO UPGRADE FORMAT; ECO 2220	2-10-78	RDB
		C	ADDED NOTE 1 PER ECO 3127	12-13-79	RDB

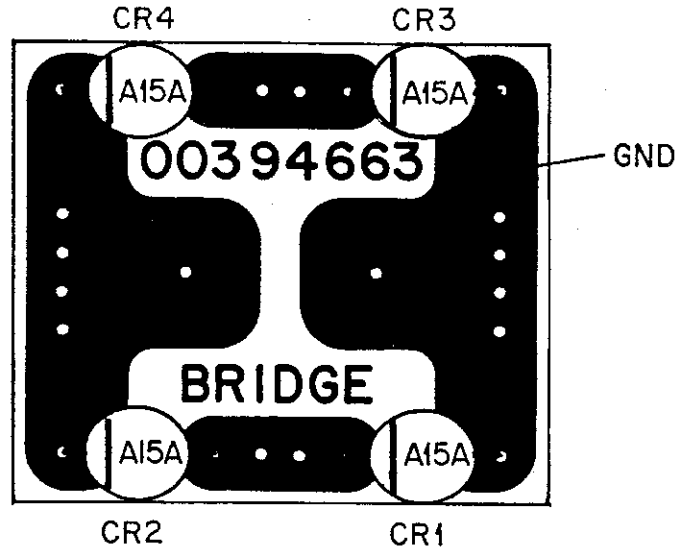

NOTES:
1. INSTALL COMPONENTS ON FOIL SIDE

ENGINEER	L.L.I.	9-5-75		
CHECKED	R.D.B.	9-5-75		
DRAFTSMAN	K.WIG	9-5-75		

AUSTRON INC. AUSTIN, TEXAS

P C BOARD ASSY – BRIDGE

(1210D) A7	4-3
REF DES	FIG NO

SIZE	CODE IDENT NO.		
1	24672	103 94664	C
SCALE 2:1		SHEET 1 OF 1	

4.2.7 There are other circuits that have been packaged off the main printed circuit cards. Among these is the Output Filters assembly, A3. These filters have been mounted on a small card in the immediate proximity of the output connectors in order to further assure signal purity.

4.2.8 1A6Q1 is the series pass transistor for the +15V regulator. 1A12R7-R10 are current limiting resistors used to protect the Pulse Amplifiers' output transistors against short circuiting.

REVISIONS				
ZONE	LTR	DESCRIPTION	DATE	APPD
	—	RELEASED	10-9-75	RDB
	A	ADDED BOARD A20		RDB
	B	ADDED BOARD A21 & OPTIONAL NOTE; ECO 2237	2-8-78	RDB

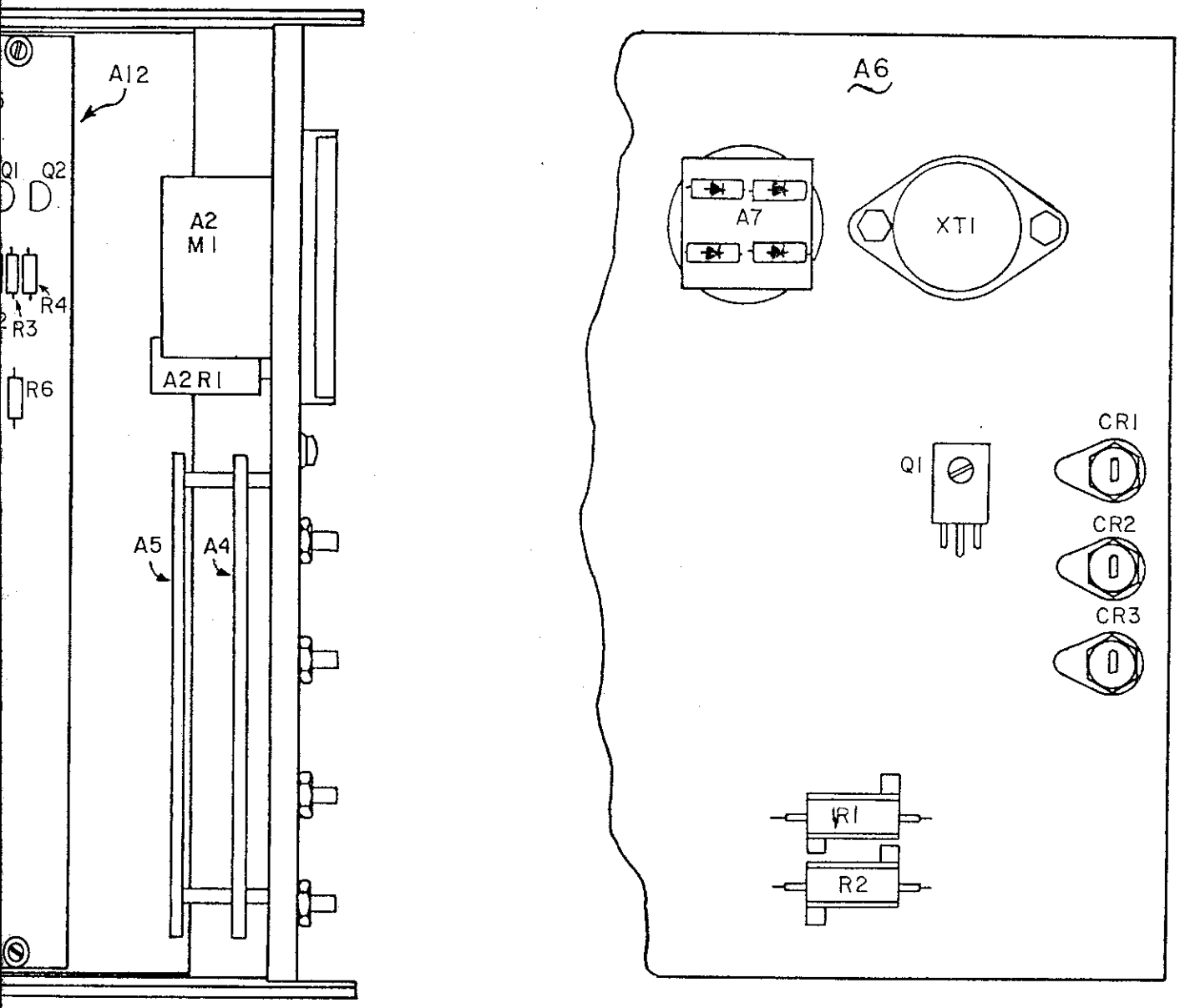

		TOLERANCES UNLESS OTHERWISE SPECIFIED			AUSTRON INC. AUSTIN, TEXAS
		DEC	FRAC	ANG	
		MATERIAL:			TOP VIEW - 1210D CRYSTAL CLOCK
	4-4				SIZE 2 / CODE IDENT NO 24672 / 124 96787 / B
REF DES	FIG NO	ENGR	L.L.ISERT	10-9-75	
		CHECK	R.BARKER	10-9-75	
N		DRFTMN	K.WIG.	10-8-75	SCALE NONE / SHEET 1 OF 1

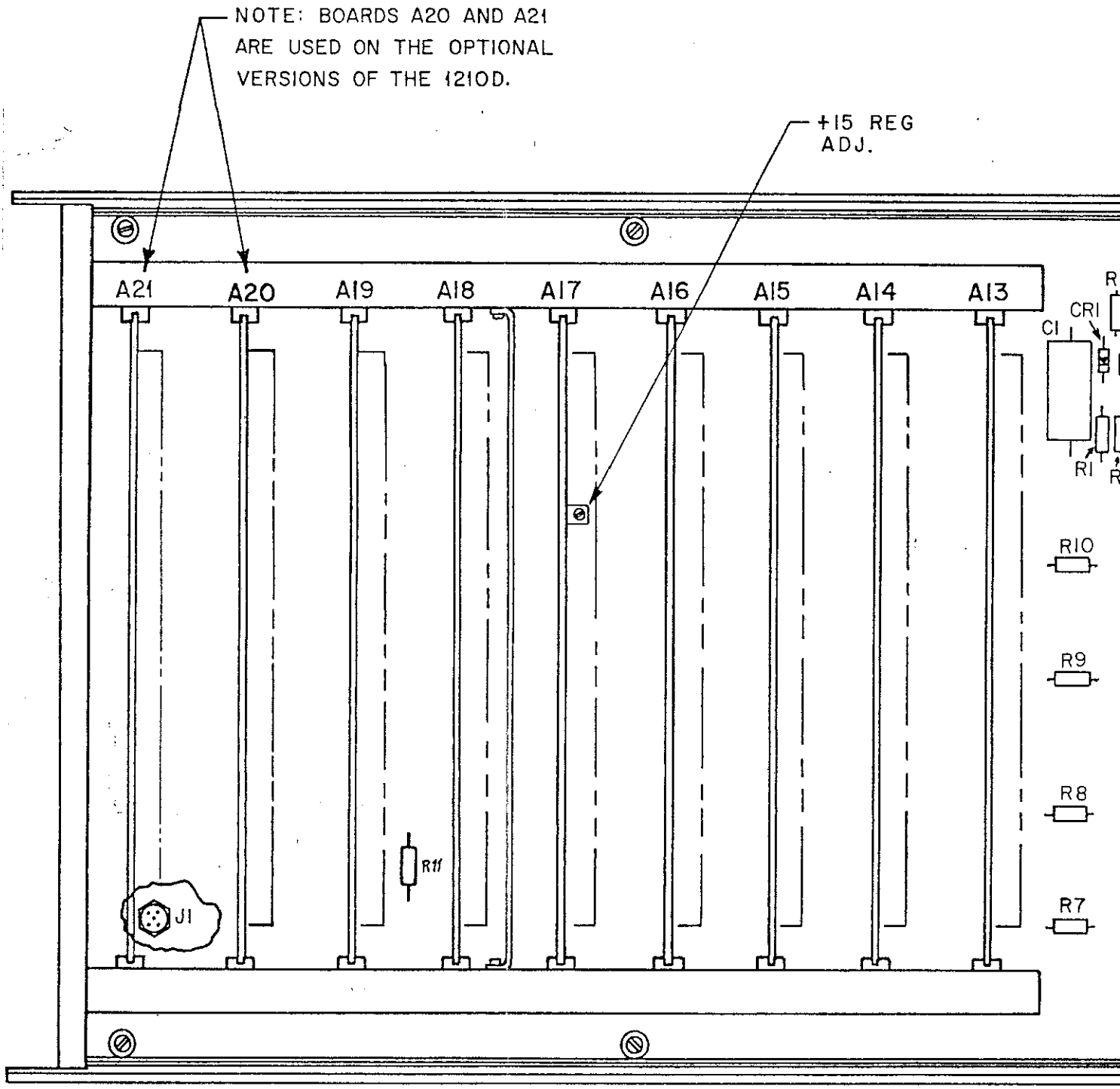

127 96209	1210D
NEXT ASSY	USED ON
APPLICATI	

REVISIONS				
ZONE	LTR	DESCRIPTION	DATE	APPD
	—	RELEASED	10-9-75	RDB

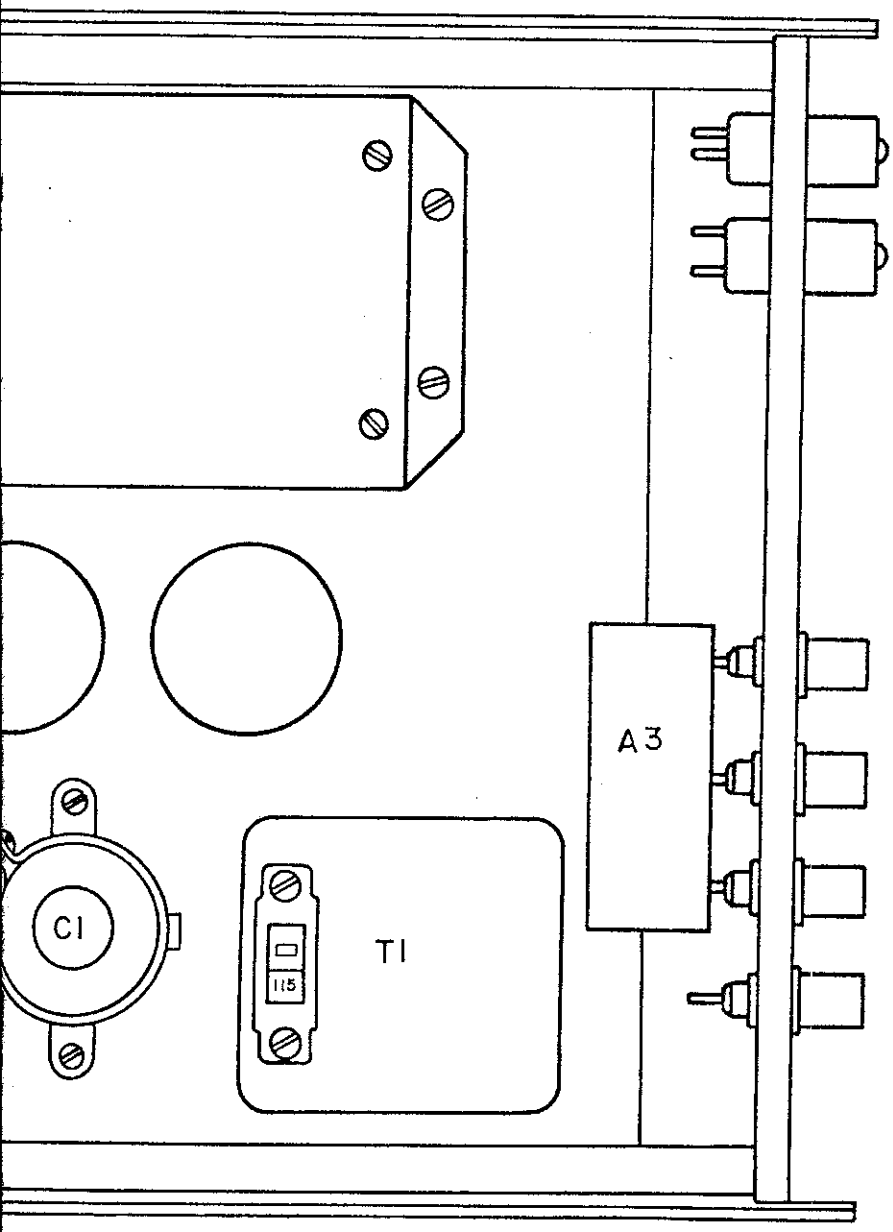

	4-5
REF DES	FIG NO
ON	

TOLERANCES
UNLESS OTHERWISE SPECIFIED

DEC	FRAC	ANG

MATERIAL:

ENGR	L.ISERT	10-9-75
CHECK	R.BARKER	10-9-75
DRFTMN	K.WIG	10-8-75

AUSTRON INC.
AUSTIN, TEXAS

BOTTOM VIEW -
1210D CRYSTAL CLOCK

SIZE	CODE IDENT NO	
2	24672	124 96786
SCALE NONE		SHEET 1 OF 1

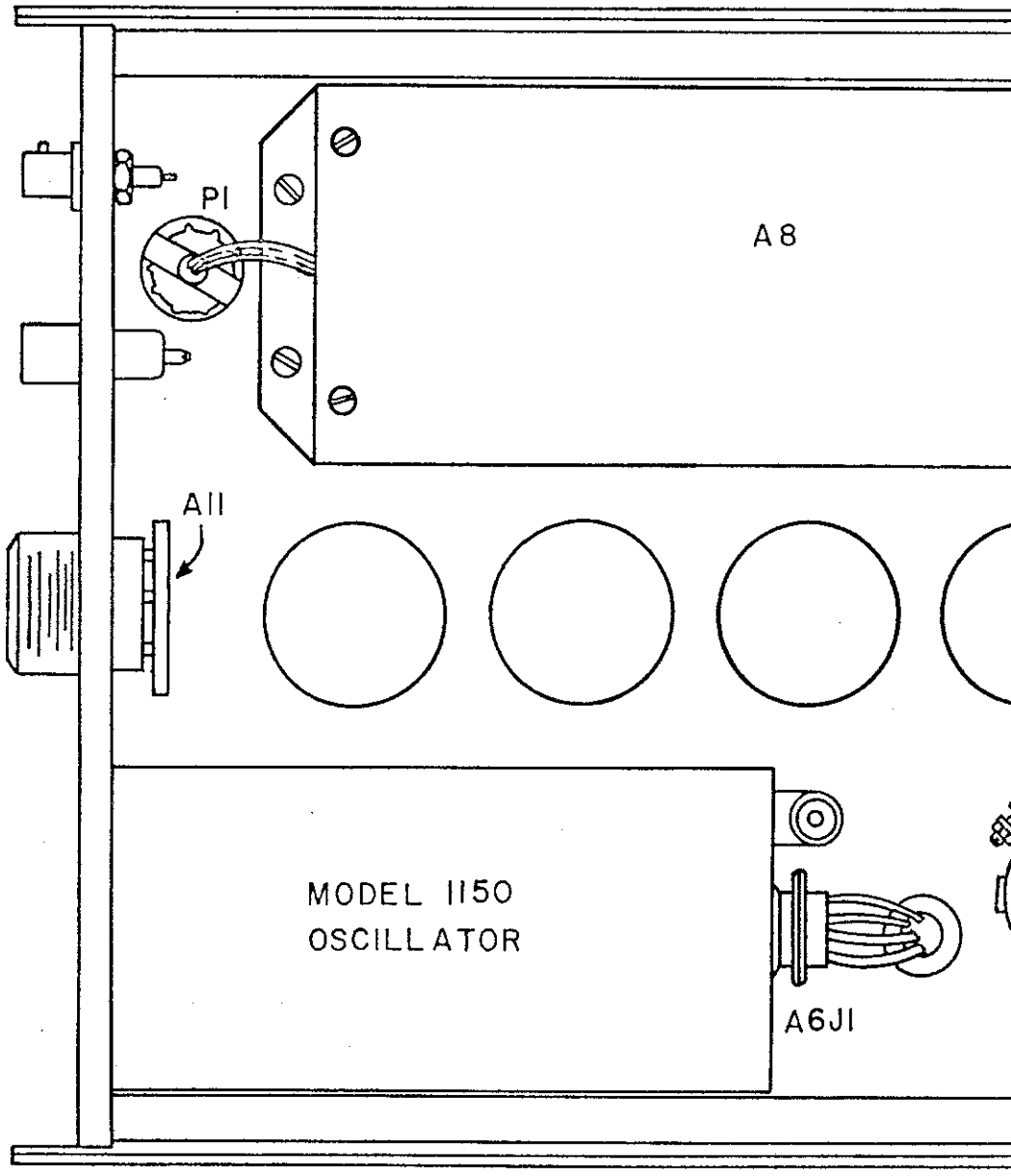

127 96209	1210D
NEXT ASSY	USED ON
APPLICATI	

APPLICATION		REVISIONS			
NEXT ASSY	USED ON	LTR	DESCRIPTION	DATE	APPROVED
109 96195	1210-D	—	RELEASED	9-29-75	RDB
		A	REVISED TITLE BLOCK TO INCLUDE REF DES & FIG. NO; SCALE WAS 1:1; PER ECO 2223	2-13-78	RDB

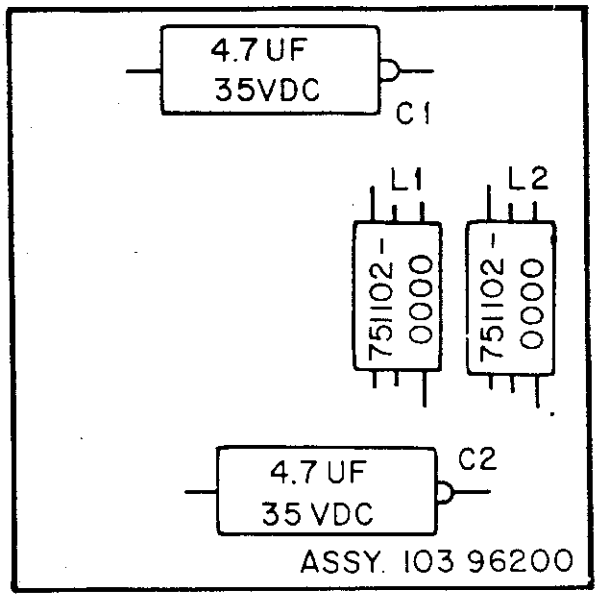

ENGINEER		9-22-75	
CHECKED		9-22-75	
DRAFTSMAN	BARKER	9-20-75	

REF DES	FIG NO
All	4-8

AUSTRON INC. AUSTIN, TEXAS

P C BOARD ASSY. – D C FILTER

SIZE	CODE IDENT NO.		
1	24672	103 96200	A
SCALE 2:1		SHEET 1 OF 1	

APPLICATION		REVISIONS			
NEXT ASSY	USED ON	LTR	DESCRIPTION	DATE	APPROVED
109 96193	1210-D	—	RELEASED	9-29-75	RDB
10996193-2	1210-D-02	A	REVISED TITLE BLOCK TO INCLUDE REF DES & FIG NO; SCALE WAS 1:1; PER ECO 2222	2-13-78	RDB
		B	ADDED PART NO'S & NOTE 2 PER ECO. 3257	2-28-80	RDB

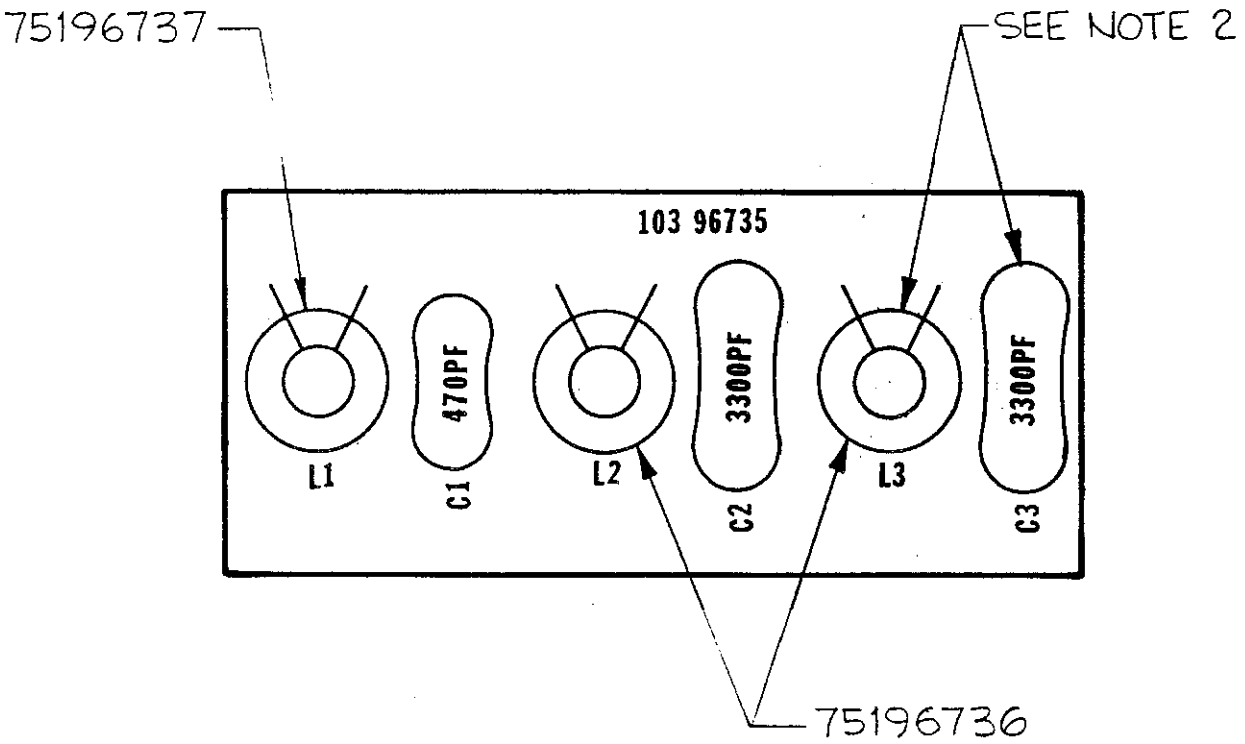

*2. C3 AND L3 NOT USED ON 10396735-1.
1. MOUNT CHOKES WITH NYLON POD.
NOTES:

		ENGINEER	[illegible]	7-22-75	AUSTRON INC. AUSTIN, TEXAS
		CHECKED	[illegible]	9-29-75	P C BOARD ASSY. – OUTPUT FILTER
		DRAFTSMAN	BARKER	9-20-75	
A3	4-7				SIZE 1 / CODE IDENT NO. 24672 / 103 96735-* / B
REF DES	FIG NO				SCALE 2:1 / SHEET 1 OF 1

4.3 +15 V REGULATOR

4.3.1 The 15 Volt Regulator (A17) is a series regulator that operates in the following manner:

4.3.2 The inductor L1 and capacitors C1, D2 and C3 form a decoupling network. The error voltage between diode VR1 and resistor R8 is amplified by a differential amplifier, Q1 and then by transistor Q2. Transistor Q2 drives a series pass transistor, located on the chassis. When the output of the regulator increases above the set point, the collector current thru R2 decreases, reducing the collector current of Q2 and decreasing the drive to the series pass transistor, thereby decreasing the output voltage of the regulator. When the regulator output decreases below the set point, the collector currents and drive currents increase, thereby increasing the output voltage of the regulator.

4.3 +15 V REGULATOR

4.3.1 The 15 Volt Regulator (A17) is a series regulator that operates in the following manner:

4.3.2 The inductor L1 and capacitors C1, D2 and C3 form a decoupling network. The error voltage between diode VR1 and resistor R8 is amplified by a differential amplifier, Q1 and then by transistor Q2. Transistor Q2 drives a series pass transistor, located on the chassis. When the output of the regulator increases above the set point, the collector current thru R2 decreases, reducing the collector current of Q2 and decreasing the drive to the series pass transistor, thereby decreasing the output voltage of the regulator. When the regulator output decreases below the set point, the collector currents and drive currents increase, thereby increasing the output voltage of the regulator.

2 1

REVISIONS				
ZONE	LTR	DESCRIPTION	DATE	APPROVED
	—	RELEASED	10-10-75	RDB
	A	R1 WAS "SELECTED"; DELETED NOTE 1; ECO 1190	12-16-75	RDB
	B	REVISED TITLE BLOCK TO INCLUDE REF DES & FIG NO.; PER ECO # 2224	2-13-78	RDB

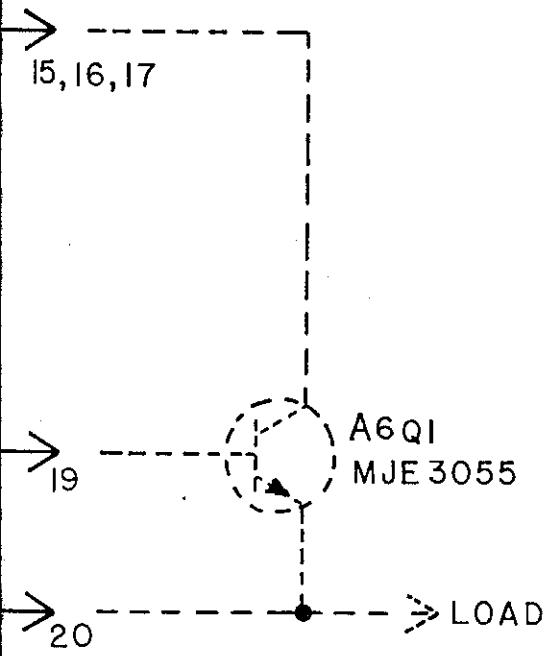

A17	4-8
REF DES	FIG NO
ON	

TOLERANCES
UNLESS OTHERWISE SPECIFIED

DEC	FRAC	ANG

MATERIAL:

ENGR	L.L.I., JR.	10-10-75
CHECK	R.D.B.	10-10-75
DRFTMN	K.WIG	10-6-75

AUSTRON INC
AUSTIN, TEXAS

SCHEMATIC DIAGRAM - +15 VDC REGULATOR

SIZE	CODE IDENT NO		
2	24672	123 96784	B
SCALE N/A		SHEET 1 OF 1	

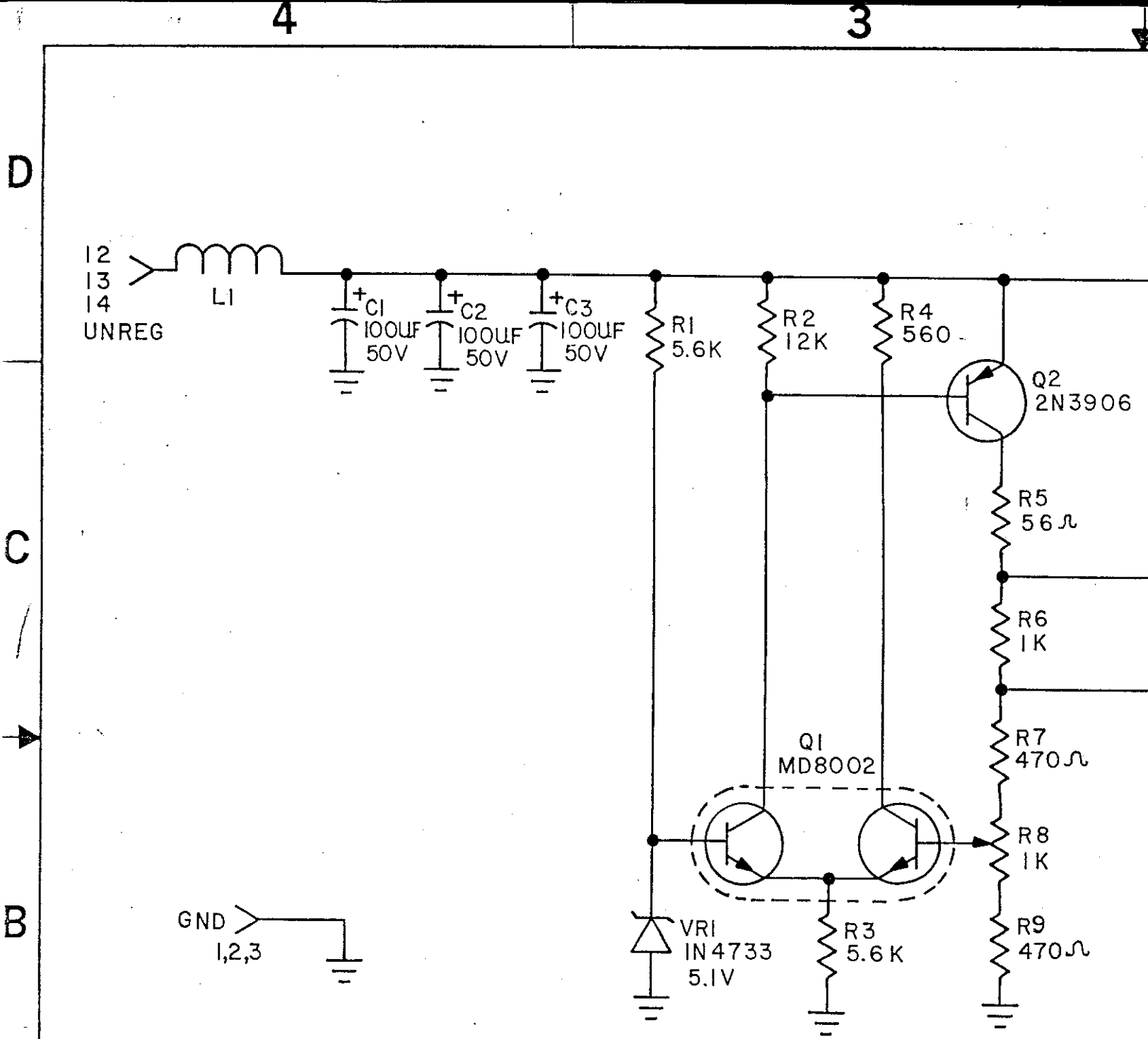

103 96197	1210D
NEXT ASSY	USED ON
	APPLICATI

NOTES; UNLESS OTHERWISE SPECIFIED

2 1

REVISIONS				
ZONE	LTR	DESCRIPTION	DATE	APPD
	—	RELEASED	9-29-75	RDB
	A	R1 WAS SELECTED; TITLE WAS +18 VDC REGULATOR; PER ECO # 1190	12-16-75	RDB
	B	REVISED TITLE BLOCK TO INCLUDE REF DES & FIG. NO.; SCALE WAS 1:1; PER ECO 2225	2-13-75	RDB
	C	REVISED PARTS LIST ECO 2565	11-20-78	RDB
	D	REVISED PARTS LIST ECO. 2890	4-16-79	RDB

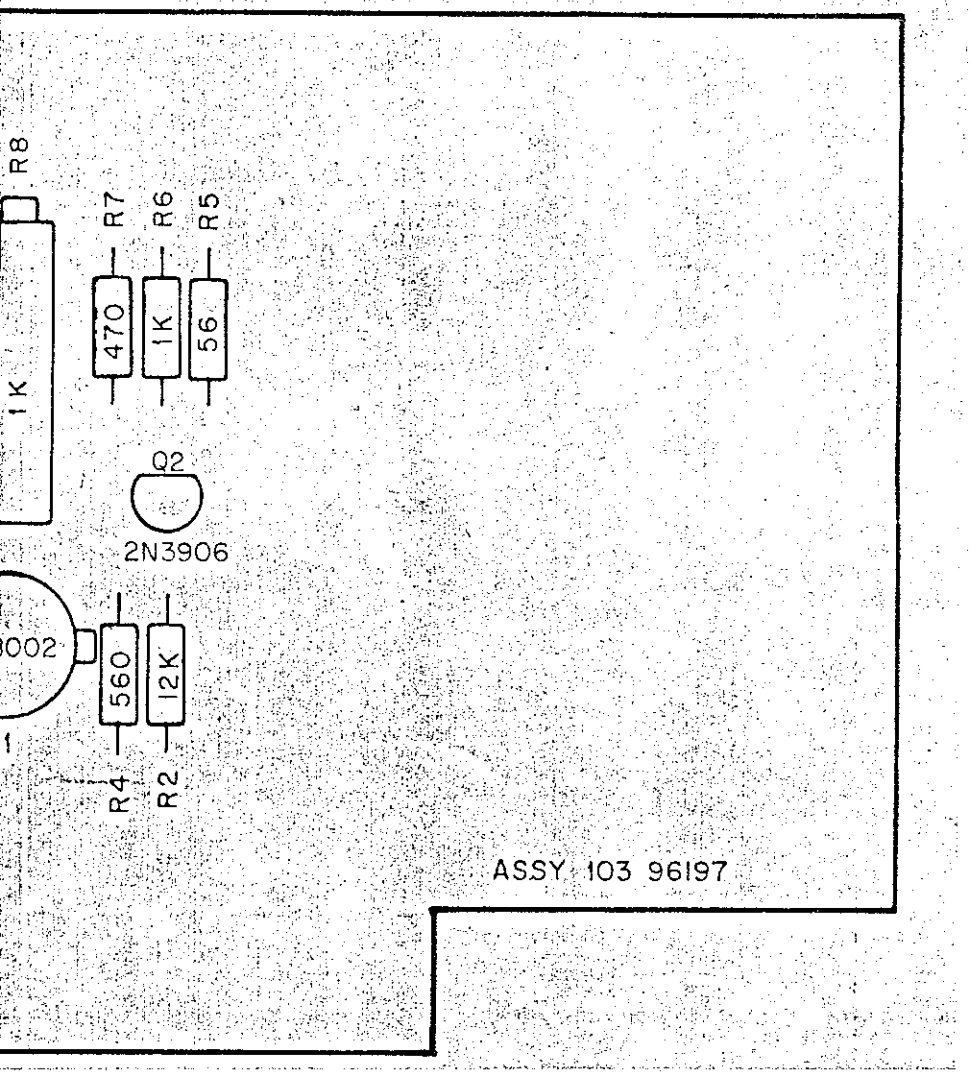

A17	4-9
REF DES	FIG NO
ON	

TOLERANCES
UNLESS OTHERWISE SPECIFIED

DEC	FRAC	ANG

MATERIAL:

ENGR	L.L.I., JR.	9-29-75
CHECK	R.D.B.	9-22-75
DRFTMN	BARKER	9-20-75

AUSTRON INC.
AUSTIN, TEXAS

PCBOARD ASSY-
+15 VDC REGULATOR

SIZE	CODE IDENT NO		
2	24672	103 96197	D
SCALE 2:1		SHEET 1 OF 1	

D C B A

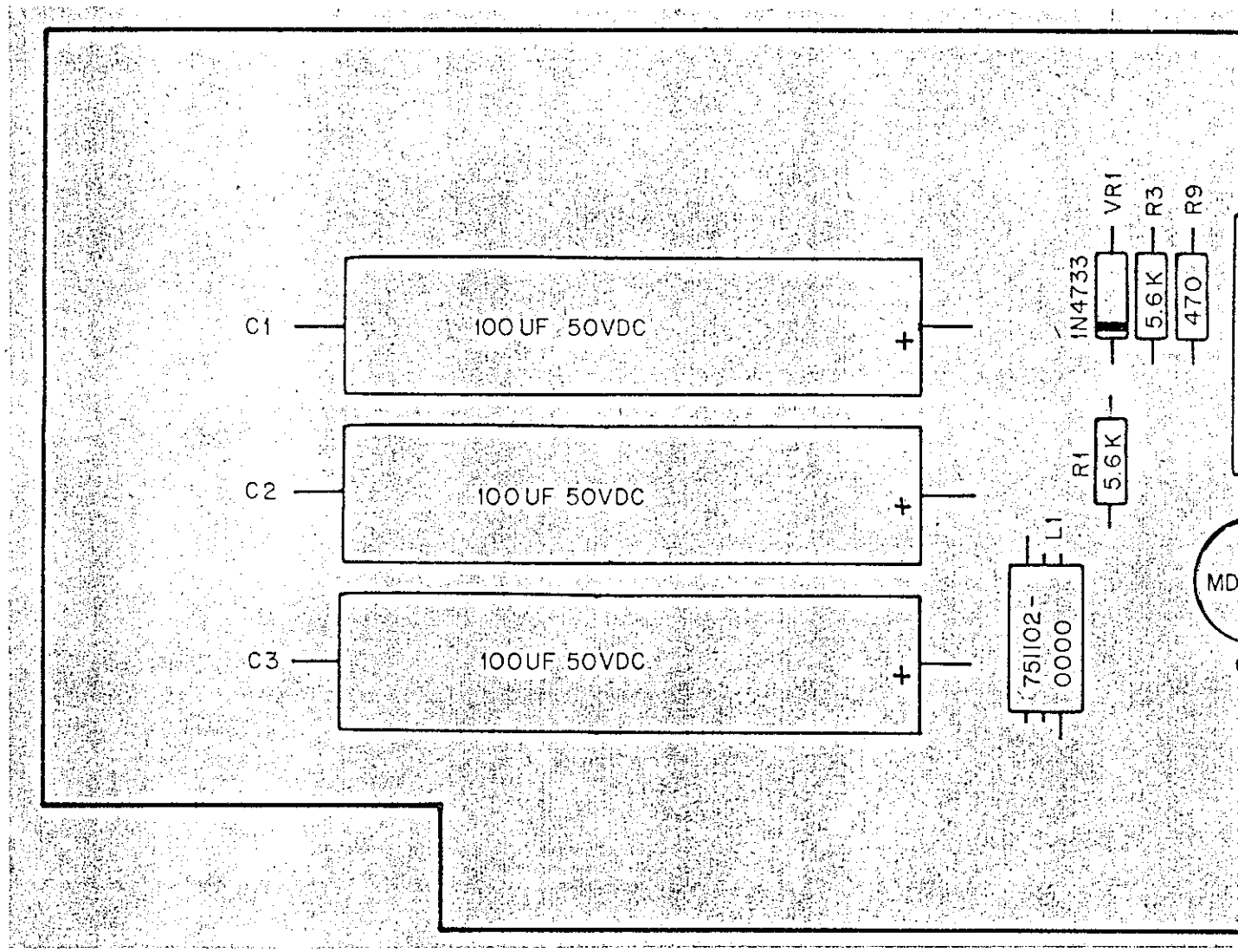

271 96208	1210D
NEXT ASSY	USED ON
APPLICATI	

2 | 1

REVISIONS				
ZONE	LTR	DESCRIPTION	DATE	APPD
	B	ADDED BORDER & TITLE BLOCK - NO CHANGE	2-10-78	RDB
	C	MR830 WAS MR840 PER ECO, 3066	10-2-79	RDB

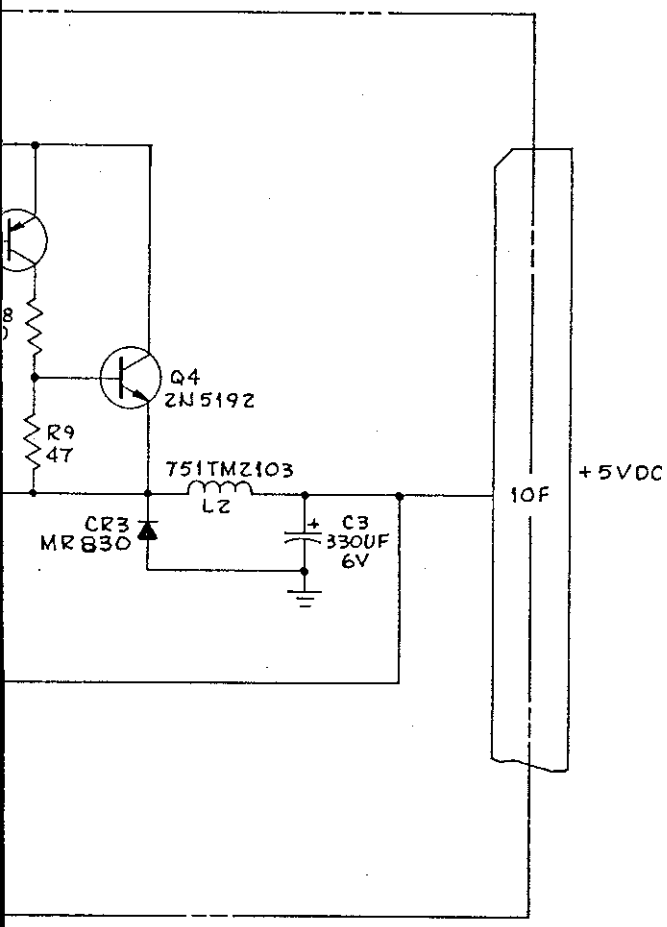

PCB4	
A16	4-10
REF DES	FIG NO
ON	

TOLERANCES
UNLESS OTHERWISE SPECIFIED

DEC	FRAC	ANG

MATERIAL:

ENGR	C.J.B.	4-10-73
CHECK		
DRFTMN	L.D.B.	4-10-73

AUSTRON INC.
AUSTIN, TEXAS

SCHEMATIC DIAGRAM - +5 VDC REGULATOR

SIZE	CODE IDENT NO		
2	24672	123 94684	C

SCALE N/A | SHEET 1 OF 1

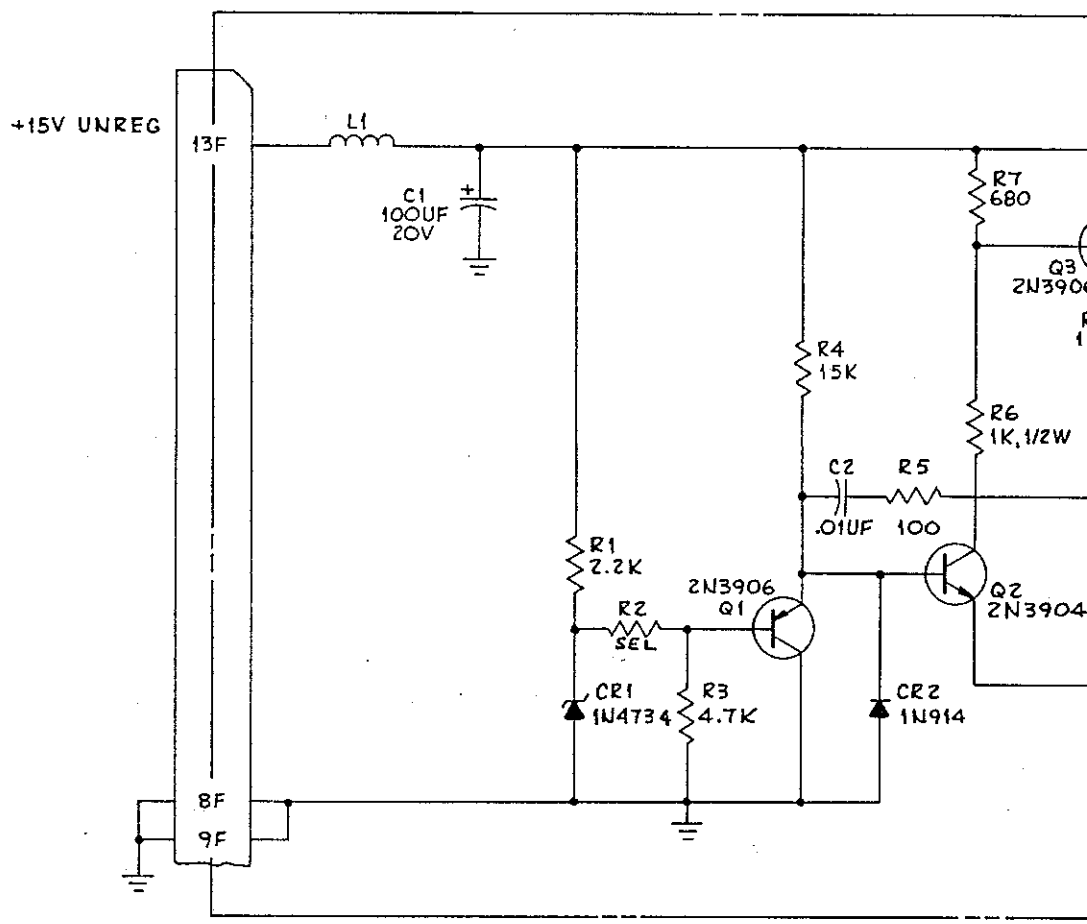

	1210C
103 94607	1210D
NEXT ASSY	USED ON
	APPLICAT

2 1

REVISIONS				
ZONE	LTR	DESCRIPTION	DATE	APPD
	C	REDRAWN ON TITLE BLOCK SHEET W/O CHG. ECO 2219	2-14-78	RDB
	D	P/L CHANGE PER ECO 2723	3-27-79	RDB
	E	REVISED PARTS LIST PER ECO. 2889	4-16-79	RDB
	F	REVISED PARTS LIST PER ECO. 2918	6-20-79	RDB
	G	MR830 WAS MR840 PER ECO. 3066	10-2-79	RDB
	H	REVISED P/L PER ECO. 3633	2-11-81	RDB
	J	REVISED P/L PER ECO 4845	12-14-83	RDB

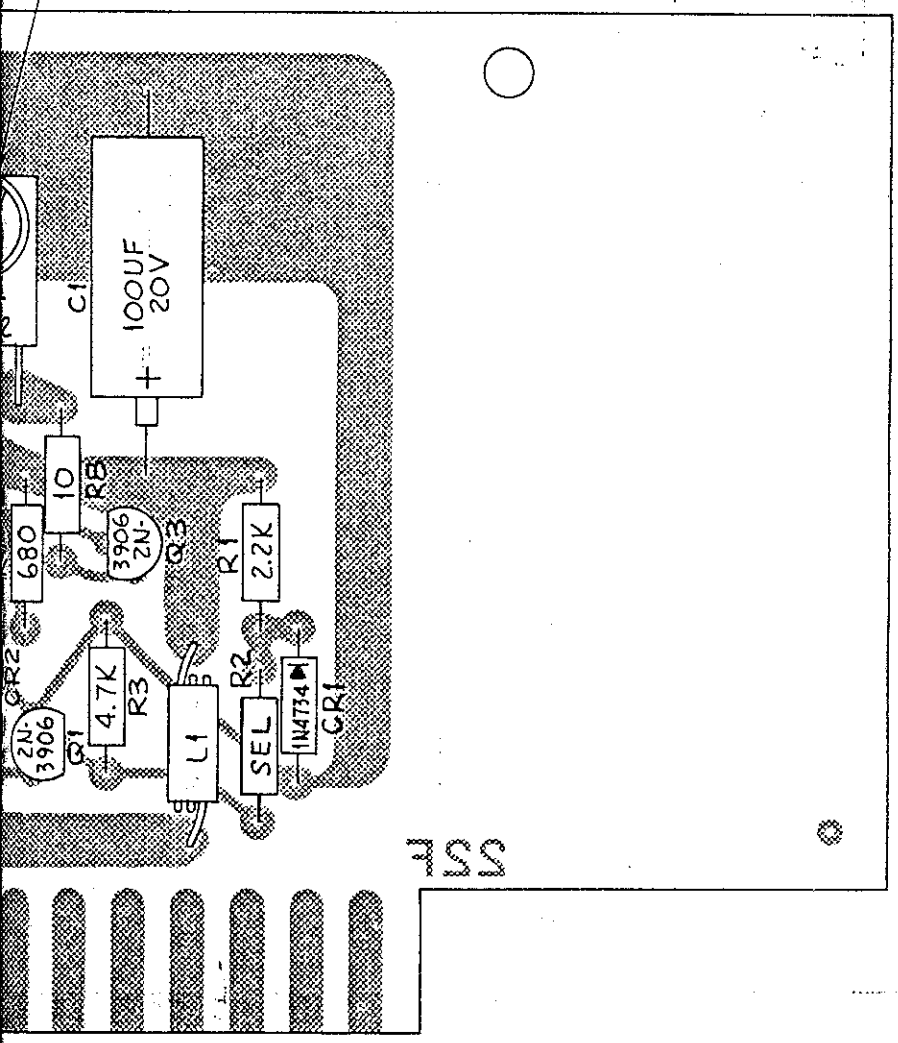

		TOLERANCES UNLESS OTHERWISE SPECIFIED			AUSTRON INC. AUSTIN, TEXAS			
		DEC	FRAC	ANG	PC BOARD ASSY - +5 VDC REGULATOR			
A16	4-11	MATERIAL:						
PCB4					SIZE 2	CODE IDENT NO 24672	103 94607	J
REF DES	FIG NO	ENGR	C.J.B.	4-10-73				
		CHECK						
N		DRFTMN	L.D.B.	4-10-73	SCALE 2:1		SHEET 1 OF 1	

4 | 3

D

C

B

A

#4-40 × 3/8 BIND. HD. SCRE
#4 INT. LOCK WASHER
#4-40 HEX NUT

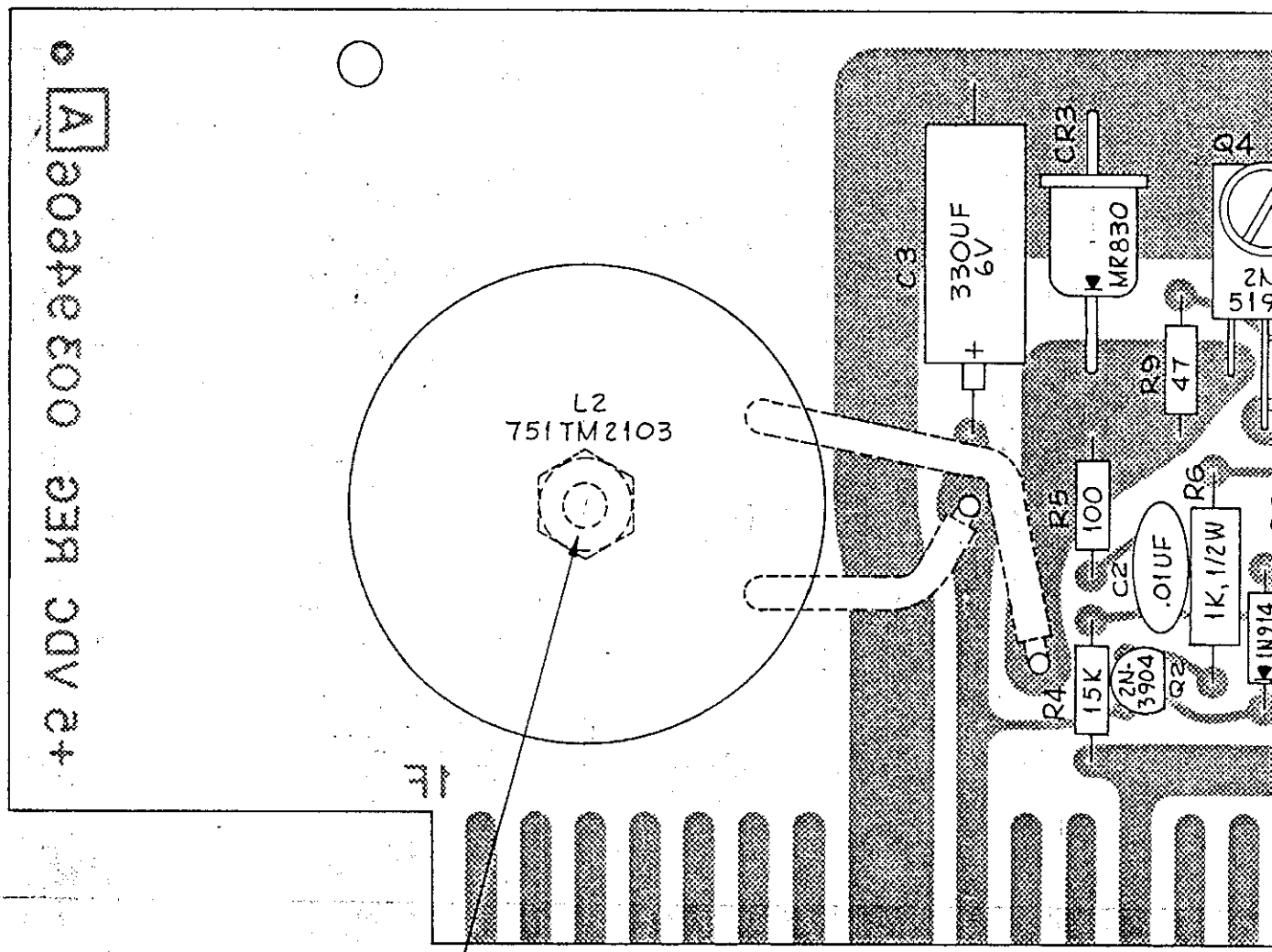

#6-32 HEX NUT
#6 INT. LOCK WASHER

27196208	1210D
27194537	1210C
NEXT ASSY	USED ON
APPLICATI	

4.5 SINE CONVERTER

4.5.1 The Sine Converter assembly (A18) contains a 5 MHz clipper, 5 MHz buffer gates, a divide by 5 stage, a decade divider and two sine converter, buffer amplifiers.

4.5.2 The 5 MHz sinewave from the internal oscillator is supplied through isolating resistor R2 and coupling capacitor C1 to the input of a two-stage direct-coupled amplifier made up of Q1 and Q2. The output of this amplifier is a 5 MHz pulse which has the proper characteristics to drive U1B, C, D, and 5 MHz buffer gate. The output of U1B is a 5 MHz signal which is supplied to U2.

4.5.3 U2 is a divide-by-five stage which produces a 1 MHz output from the 5 MHz input. The 1 MHz output from U2 is fed through a low pass filter R9, C6, to the base of Q3, a collector tuned RF amplifier. The resulting 1 MHz sinewave at the secondary of R1 is used to drive a 1 MHz output buffer.

4.5.4 U3 is a decade divider which produces a 100 kHz output from a 1 MHz input supplied from U2. The 100 kHz signal is fed through a low pass filter R8 and C5 to the base of Q4, a collector tuned output amplifier. The 100 kHz signal present at the secondary of T2 is used to drive a 100 kHz output buffer.

REVISIONS				
ZONE	LTR	DESCRIPTION	DATE	APPROVED
	—	RELEASED	10-9-75	RDB
	A	ADDED DASHED LINE TO 100KHZ SECTION; R16 WAS 47; R10 WAS 33 PER ECO 1460	5-18-76	RDB
	B	STANDARDIZED ON 5400 J'S PER ECO. 2058, 2087	9-23-77	RDB
	C	DELETED R1, R6, R7. C3 & C4 WERE 33µf. ADDED U4. DELETED NOTE 1. PER ECO 4426	4-8-83	RDB
	D	ADDED NOTE 4 PER ECO 4460	4-27-83	RDB

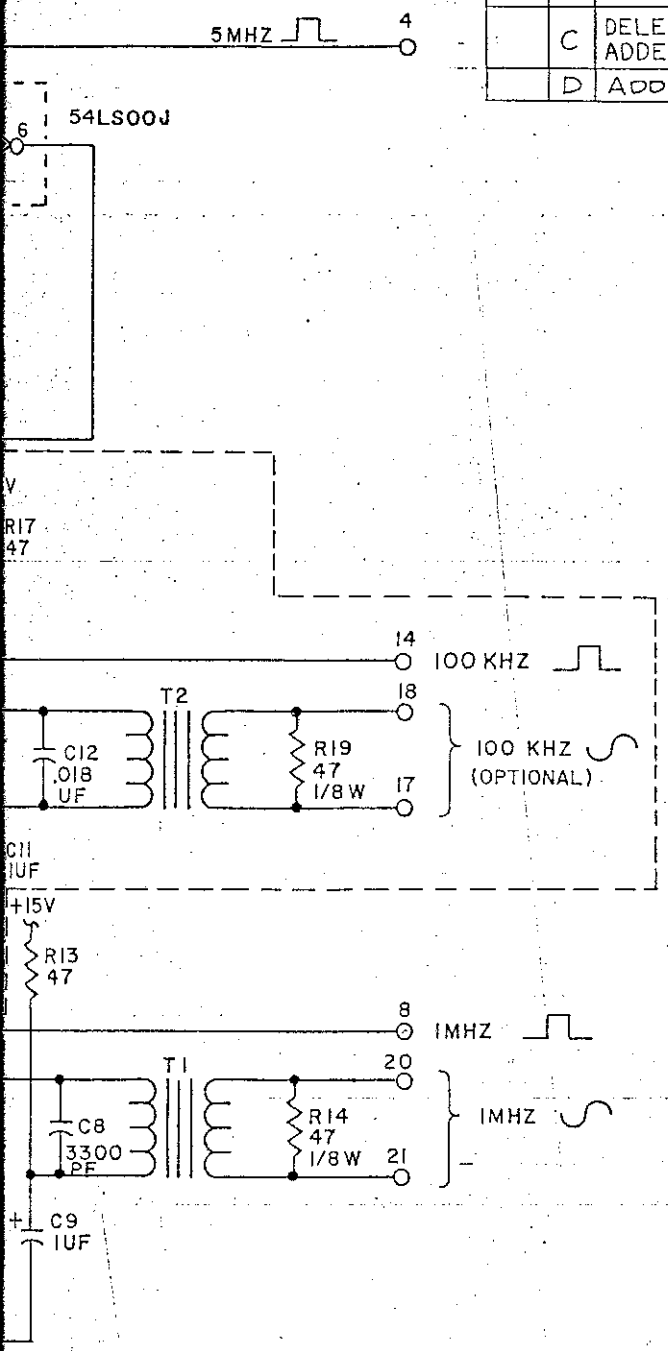

NOTES:

1. ALL RESISTORS ARE 1/4 W 10% UNLESS NOTED.
2. ALL TRANSISTORS 2N 3904
3. IC'S ARE SELECTED FOR AMBIENT TEMPERATURE REQUIREMENT OF THE UNIT.
*4. VERSIONS PRIOR TO REVISION "C" USED DROPPING RESISTORS IN PLACE OF U4.

QTY REQD	ITEM NO	REF DES	PART NO	NOMENCLATURE	VENDOR
-1	LIST OF MATERIAL				

UNLESS OTHERWISE SPECIFIED DIMENSIONS ARE IN INCHES DO NOT SCALE DRAWINGS

TOLERANCES UNLESS OTHERWISE SPECIFIED

DECIMALS	FRACTIONS	ANGLES

MATERIAL:

ENGINEER	LAS/h	10-7-75
CHECKED	RDB	10-9-75
DRAFTSMAN	Jim Wiley	

AUSTRON INC. AUSTIN, TEXAS

SCHEMATIC DIAGRAM
SINE CONVERTER

SIZE	CODE IDENT NO.		
3	24672	123 96096	D

SCALE NONE SHEET 1 OF 1

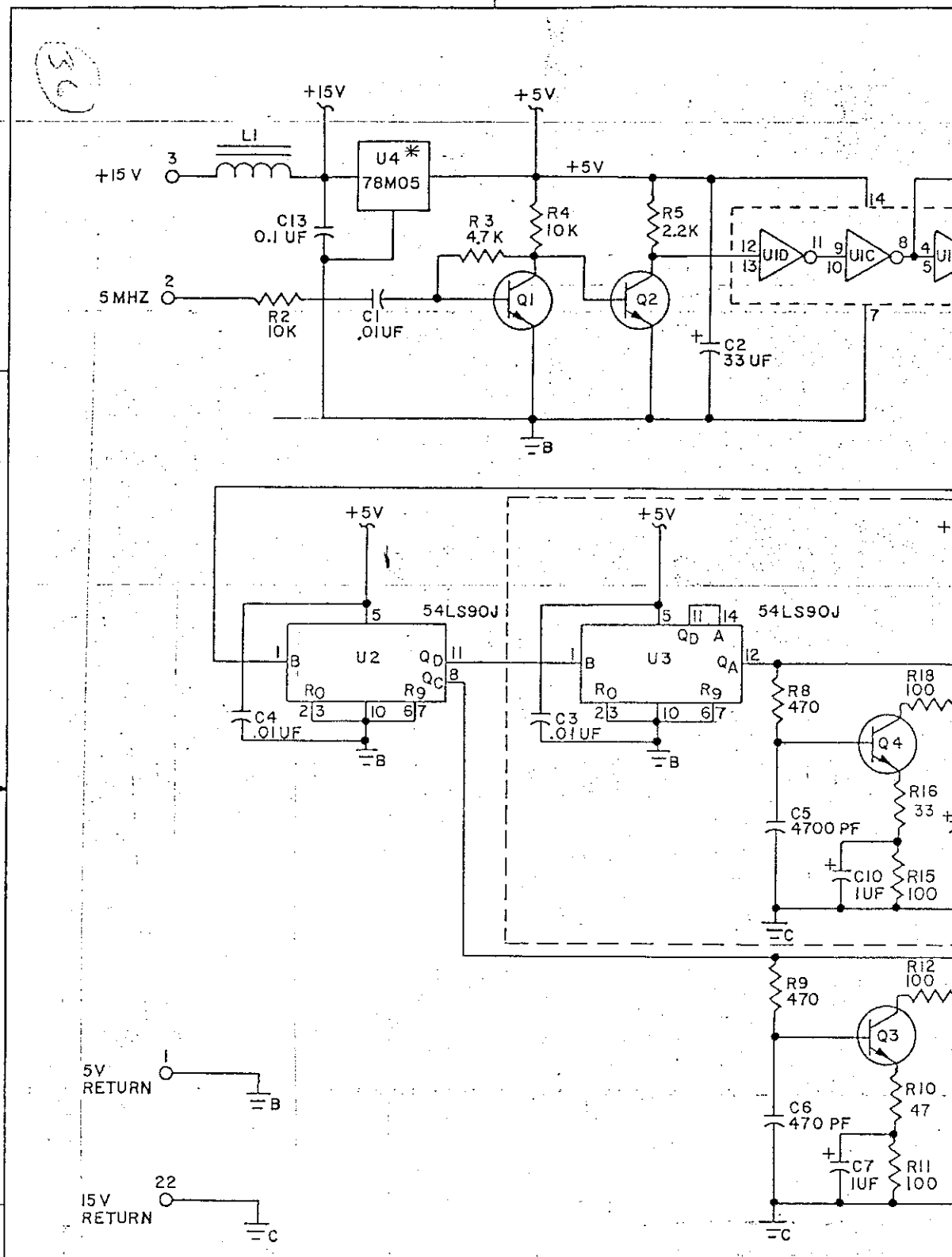

1A1A4	4-3	127 97317	1250A
A18	4-12	103 96025	1210 D
REF DES	FIG NO	NEXT ASSY	USED
APPLICATION			

2 1

REVISIONS

ZONE	LTR	DESCRIPTION	DATE	APPROVED
	—	RELEASED	10-7-75	RDB
	A	REVISED TO ADD "-1" PER ECO #1191	12-31-75	RDB
	B	ADDED DASH LINES & "OPTIONAL" PER ECO 1459	5-18-76	RDB
	C	ADDED S & F DESIGNATORS TO T1 & T2 PER ECO 1856	3-16-77	RDB
	D	STANDARDIZED ON 5400 J'S PER ECO. 2058, 2087	9-23-77	RDB
	E	CORRECTED TYPE NO. OF U2 & U3 PER ECO 2234	2-13-78	RDB
	F	REVISED PARTS LIST PER ECO. #2810	4-16-79	RDB
	G	REVISED SILKSCREEN PER ECO. #3088	9-24-79	RDB
	H	REVISED PARTS LIST PER ECO # 3069	10-6-80	RDB
	J	ADDED NOTE 2 PER ECO. 3874	9-1-81	RDB
	K	REVISED PARTS LIST PER ECO. 4224	10-19-82	RDB
	L	DELETED R1, R6, R7. C3 & C4 WERE 33 UF. ADDED U4 & C13 PER ECO 4426	4-8-83	RDB
	M	ADDED 601100-0104 TO P/L PER ECO 4437	4-14-83	RDB
	N	ADDED NOTE 3 PER ECO 4460	4-27-83	RDB
	P	ADDED NOTE 4 PER ECO 4881	12-21-83	RDB

D

C

B

A

ITEM NO	REF DES	PART NO	NOMENCLATURE	VENDOR

LIST OF MATERIAL

UNLESS OTHERWISE SPECIFIED DIMENSIONS ARE IN INCHES
DO NOT SCALE DRAWING

TOLERANCES
UNLESS OTHERWISE SPECIFIED

DEC	FRACT	ANG

ENGINEER	RLL	10-9-75
CHECKED	RDB	10-9-75
DRAFTSMAN	BARKER	10-7-75

MATERIAL:

AUSTRON INC AUSTIN TEXAS

P C BOARD ASSY - SINE CONVERTER

SIZE	CODE IDENT NO		
2	24672	103 96025 *	P

SCALE 1:1 SHEET 1 OF 1

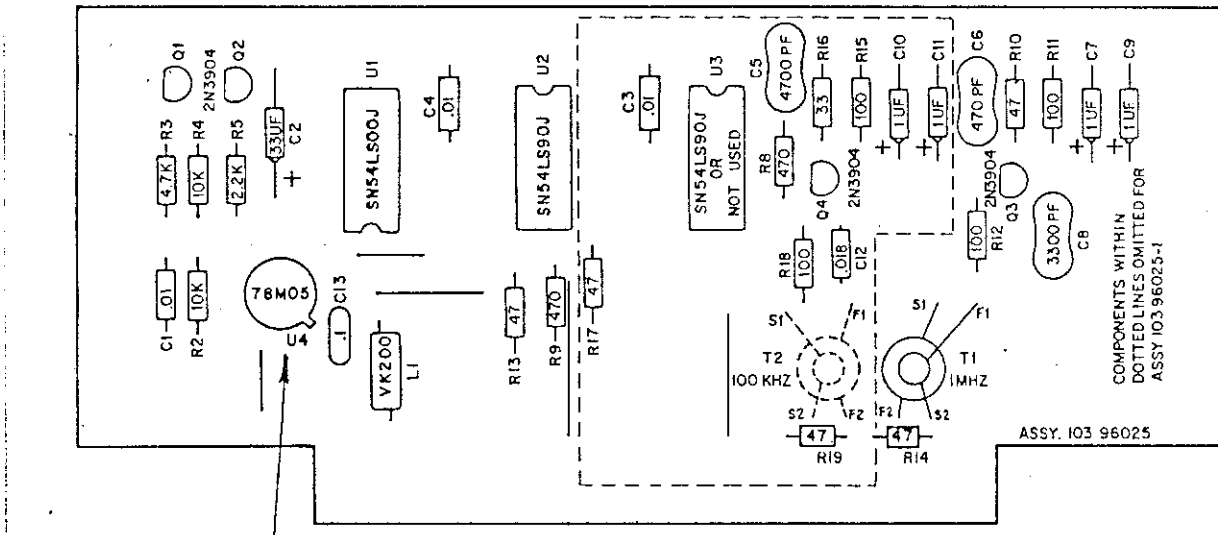

SEE NOTE 3

4. ON TRANSFORMERS T1 & T2,
THE RED WIRES ARE FOR S1 & F1.
THE GREEN WIRES ARE FOR S2 & F2.

3. VERSIONS PRIOR TO REVISION "L" USED DROPPING RESISTORS IN PLACE OF U4.

2. WHEN INSTALLING T2, CONNECT "F1" LEAD WITHOUT TRIMMING EXCESS LENGTH.

* 1. FOR 10396025-1 DO NOT INSTALL COMPONENTS IN THE AREA WITHIN THE DOTTED LINES.

NOTES

QTY REQ
-1

A18		271 96208-1	1210D-01
1A1A4	4-4	254 95205 *	1250A
A18	4-13	271 96208	1210D
REF DES	FIG NO	NEXT ASSY	USED ON

APPLICATION

4.6 OUTPUT AMPLIFIERS

4.6.1 The Output Amplifier assembly (A19) contains three similar amplifiers which operate in an analogous manner. This description will consider the 5 MHz amplifier.

4.6.2 Crystal Y1 is an input filter with R2 as its load. The transistors Q1 and Q2 form a two-stage common emitter, collector tuned amplifier with negative feedback. The feedback ratio is determined by R7 and R6. These amplifiers have been designed to allow a minimum level change for a maximum load change.

REVISIONS				
ZONE	LTR	DESCRIPTION	DATE	APPROVED
	—	RELEASED	11-26-75	R DB
	A	ECO 1273 (1) ADDED R27, R28, AND NOTE 2	2-17-76	R DB
	B	ADDED REF TO R1 IN NOTE 2; DELETED VALUES FROM R7, R16, & R25 PER ECO 1463	5-18-76	RDB
	D	R29 WAS R9; R29, R19 AND CR3 WERE ANOTATED WITH JUST A SINGLE ASTERISK, DELETED ▷ TWO PLACES PER ECO 2261	3-7-78	RDB

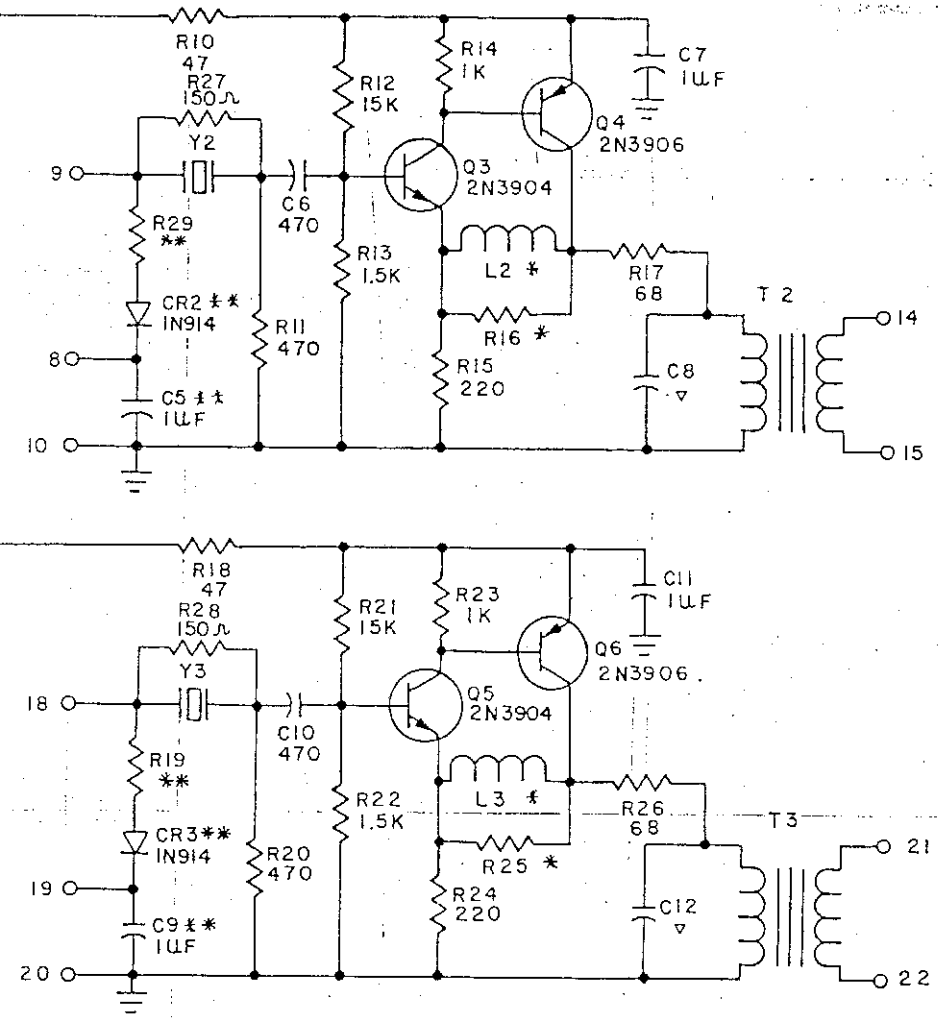

3 96031	1250		
96031-1	1210D	A19	4-14
XT ASSY	USED ON	REF DES	FIG NO

APPLICATION

TOLERANCES UNLESS OTHERWISE SPECIFIED

DECIMALS	FRACTIONS	ANGLES

MATERIAL:

ENGR	L.L. ISERT, JR	10-4-75
CHECK	R. BARKER	10-4-75
DRFTSMN	K. WIGINTON	9-30-75

AUSTRON INC.
AUSTIN, TEXAS

SCHEMATIC DIAGRAM - OUTPUT AMPLIFIER

SIZE	CODE IDENT NO		
3	24672	123 96098	D
SCALE N/A			SHEET 1 OF 1

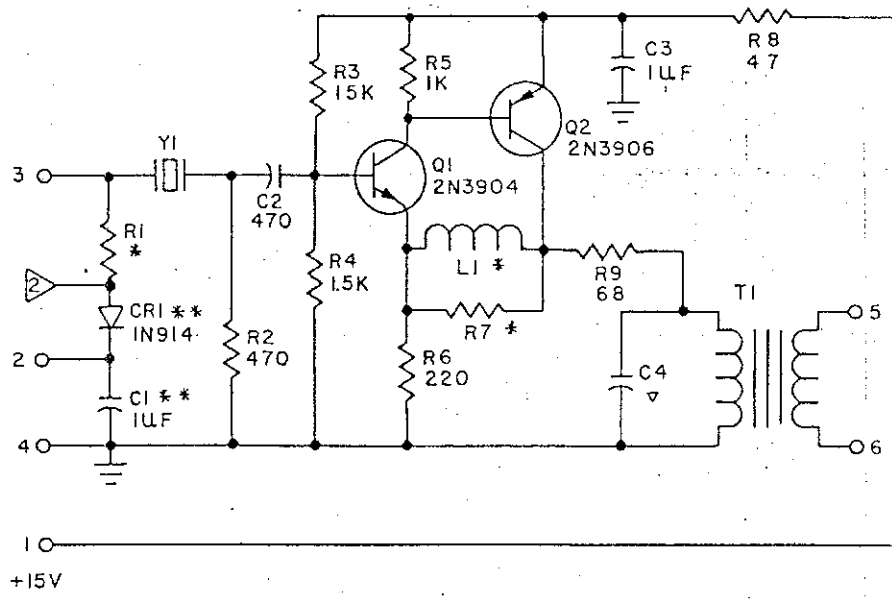

	Y	C▽	T
10 MHZ	10 MHZ	1000 pf	751 95769
5 MHZ	5 MHZ	470 pf	751 95768
1 MHZ	1 MHZ	3300 pf	751 95770
100 KHZ	NOT USED	.018 µf	751 96926

NOTES:

1. * SELECTED FOR OUTPUT LEVEL 1V RMS INTO 50 OHMS

** USED ON 1250 ONLY -- PARTS ARE OMITTED IN 1210D.

2 THIS POINT IS GROUNDED ON 1210-D AND R1 IS 47 OHMS.

2 1

REVISIONS				
ZONE	LTR	DESCRIPTION	DATE	APPROVED
	—	RELEASED	10-7-75	RDB
	A	ECO 1273 (1) REVISED EXTENSIVELY (2) DELETED -1	2/16/76	RDB JES
	B	REINSTATED DASH 1 AND ADDED DASH No. DESCRIP. BLOCK PER ECO 1368	5-6-76	RDB
	C	ADDED VALUES TO Y1, Y2 & Y3; ADDED S1 & S2 TO T1, T2 & T3; PER ECO # 1855	3-16-77	RDB

D

C

B

A

A19	4-15
REF DES	FIG NO
ON	

TOLERANCES
UNLESS OTHERWISE SPECIFIED

DEC	FRAC	ANG

MATERIAL:

ENGR	L. ISERT	10-9-75
CHECK	R. BARKER	10-9-75
DRFTMN	R. BARKER	10-7-75

AUSTRON INC.
AUSTIN, TEXAS

PC BOARD ASSY-
OUTPUT AMPLIFIER

SIZE	CODE IDENT NO		
2	24672	103 96031 *	C
SCALE 1:1		SHEET 1 OF 1	

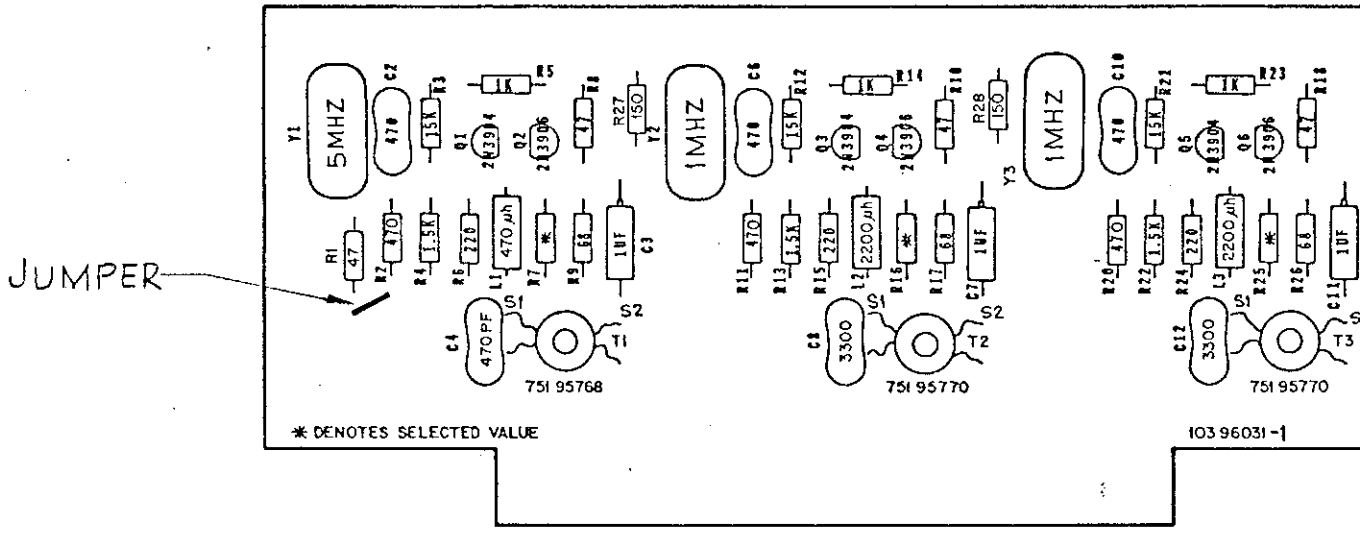

DASH	DESCRIPTION	USED ON
NO DASH	NO LONGER IN PRODUCTION REPLACED BY 103 96986	1250
-1	AS SHOWN	1210D

271 96208	1210D
NEXT ASSY	USED ON
	APPLICAT

4.7 TIME SYNC

4.7.1 The Time Sync assembly (A15) contains a digital phase shifter and circuits which allow the clock to be synchronized by an external signal.

4.7.2 The digital phase shifter is made up of U1, U2, U3, and the A section of U4. The phase shifter accepts a 5 MHz signal from the 1 MHz/5 MHz Output card and normally divides it by 5. On command however, the divider can be forced to divide by 4 or 6, thus "adding" or "subtracting" cycles at a rate selected by the setting of S6. The rate commands are supplied through U3D. The direction command is supplied through U3B.

4.7.3 The external signal, EXT SYNC, (used to synchronize the clock to an external source) is first conditioned and converted to TTL levels by the wave shaper circuits that include Q1 and Q2.

4.7.4 The synchronizer circuits consist of U4B and U5. The purpose of these circuits is to generate the R0 signal and the $\overline{\text{ENABLE}}$ whenever U4B-9 has been preset high by $\overline{\text{ARM}}$. R0 is used on the divider card to reset the decade divider chain, thus synchronizing all clock outputs. U5B clears U4B, forcing the clock to be re-armed before another R0 can be generated. Thus, the clock is automatically disarmed when synchronizing from an external source.

4.7.5 The $\overline{\text{ENABLE}}$ signal is used to enable the ADV/RET switch and the SET/RUN switch. DISARM must be manually generated by the ARM/DISARM switch after arming the clock to use either the slewing or clock setting functions.

4.7.6 The lamp driver, Q3, turns on the ARM lamp whenever U4B is in the armed state.

REVISIONS				
ZONE	LTR	DESCRIPTION	DATE	APPD
	C	ADDED BORDER & TITLE BLOCK; SHEET SIZE WAS 2	2-10-78	RJB

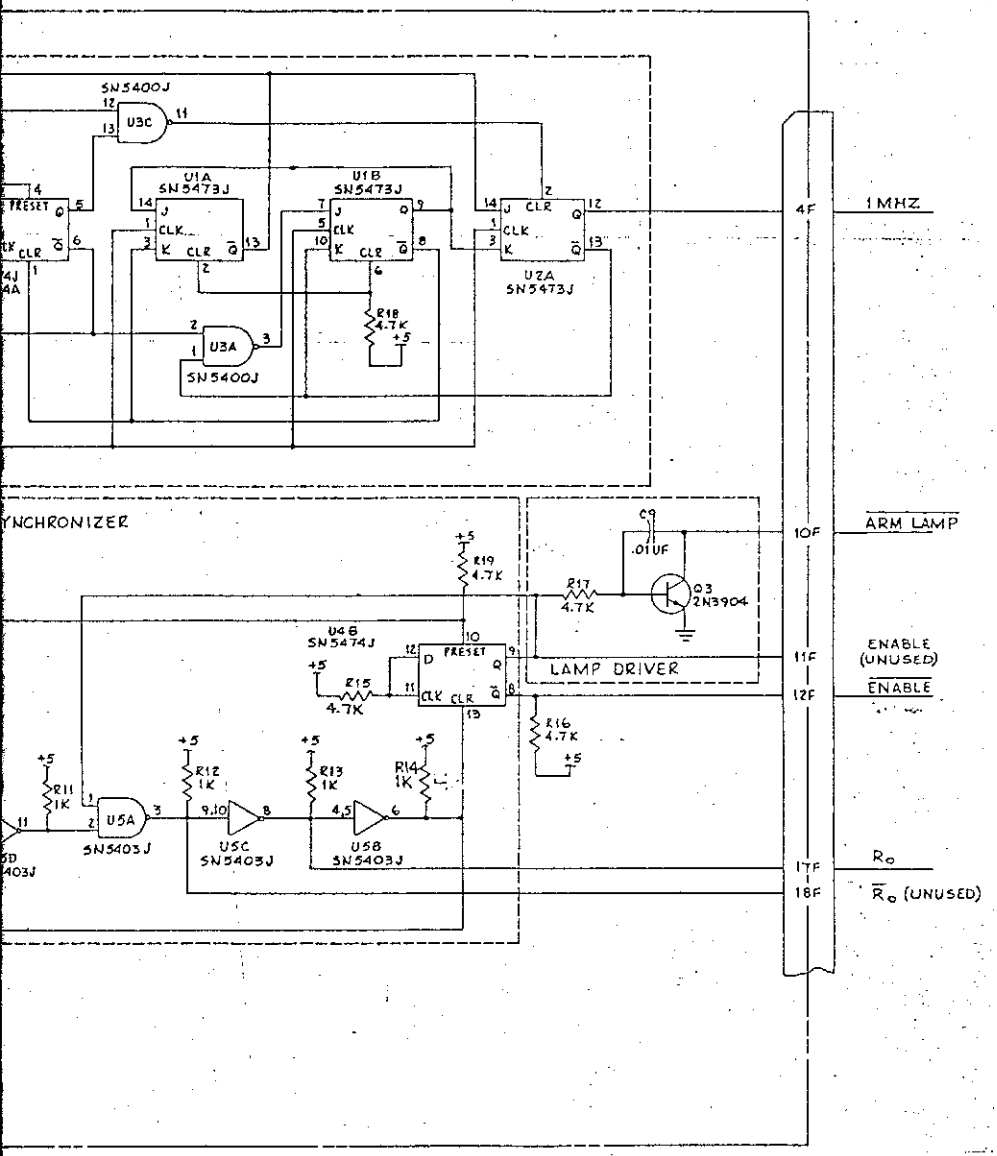

27 96209	1210D	A15	4-16
	1210C	PCB 5	
NEXT ASSY	USED ON	REF DES	FIG NO
APPLICATION			

TOLERANCES UNLESS OTHERWISE SPECIFIED		
DECIMALS	FRACTIONS	ANGLES
MATERIAL:		
ENGR	C.J. BALZER	4-11-73
CHECK		
DRFTSMN	L.D. BECKER	4-11-73

AUSTRON INC.
AUSTIN, TEXAS

SCHEMATIC DIAGRAM - TIME SYNC.

SIZE	CODE IDENT NO		
3	24672	123 94686	C
SCALE N/A			SHEET 1 OF 1

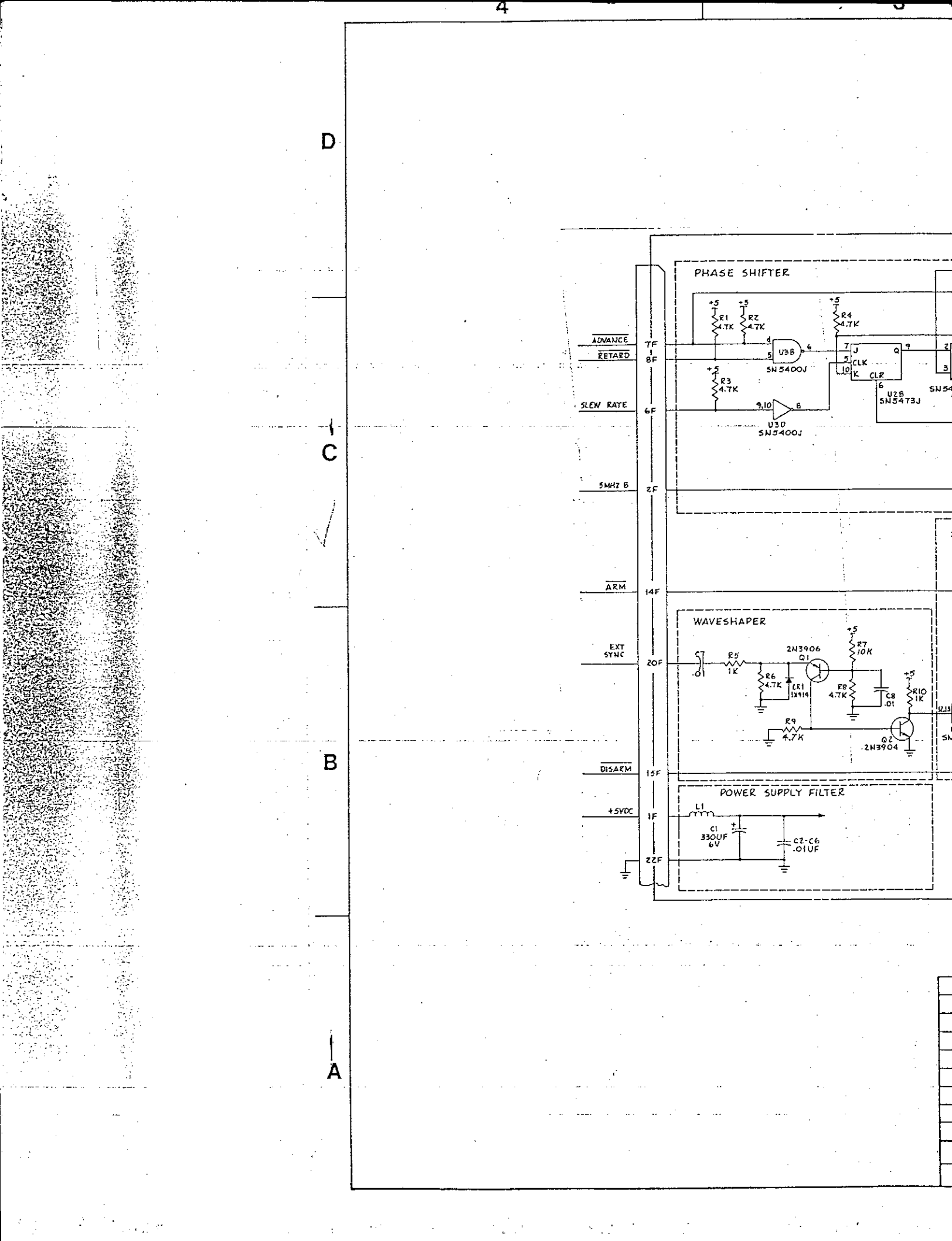
PHASE SHIFTER
ADVANCE
RETARD
SLEW RATE
5MHZ B
ARM
EXT SYNC
DISARM
+5VDC
7F
8F
6F
2F
14F
20F
15F
1F
22F
R1 4.7K
R2 4.7K
R3 4.7K
R4 4.7K
U3B
SN5400J
U3D
SN5400J
U2B
SN5473J
WAVESHAPER
C7 .01
R5 1K
R6 4.7K
CR1 1N914
2N3906 Q1
R7 10K
R8 4.7K
C8 .01
R9 4.7K
R10 1K
Q2 2N3904
POWER SUPPLY FILTER
L1
C1 330UF 6V
C2-C6 .01UF

2 | 1

REVISIONS				
ZONE	LTR	DESCRIPTION	DATE	APPD
	E	REDRAWN TO UPGRADED STDS PER ECO # 2075	10-26-77	RDB
	F	REVISED PARTS LIST PER ECO. 2892	4-16-79	RDB

D

C

B

A

A15	4-17
A15	4-17
REF DES	FIG NO
ON	

TOLERANCES
UNLESS OTHERWISE SPECIFIED

DEC	FRAC	ANG

MATERIAL:

ENGR	ISERT	10-26-77
CHECK	BARKER	10-26-77
DRFTMN	PRELLOP	10-25-77

AUSTRON INC.
AUSTIN, TEXAS

PC BOARD ASSY –
TIME SYNC.

SIZE	CODE IDENT NO		
2	24672	103 94618	F

SCALE 1:1 | SHEET 1 OF 1

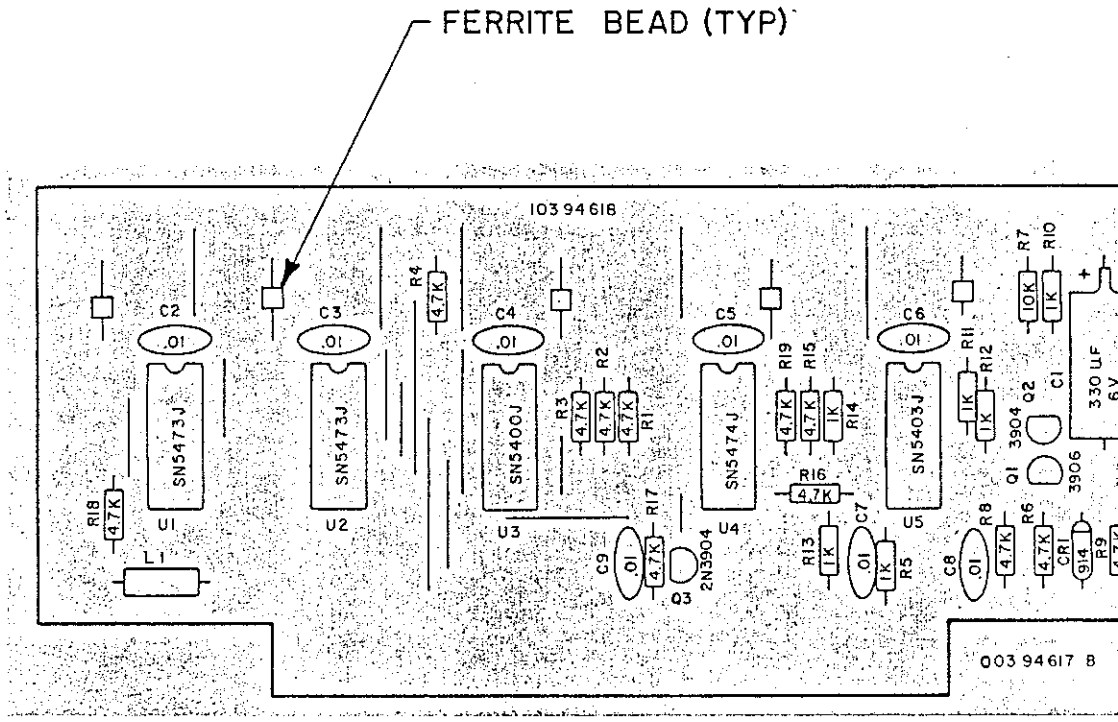

271 96208-1	1210D-01
271 96208	1210D
NEXT ASSY	USED ON
	APPLICAT

4.8 DIVIDER CARD

4.8.1 The Divider assembly (A14) contains provisions for eight cascade decade dividers.

4.8.2 The 1 MHz TTL output from the Time Sync card is divided to 1 Hz by means of six cascade decade dividers. The resulting 1 Hz and other intermediate rates are used by the Clock Driver and the Phase Shifter cards.

4.8.3 The R0 signal originates on the Time Sync card, and is used to reset all dividers when synchronizing the clock to an external source.

2 1

REVISIONS				
ZONE	LTR	DESCRIPTION	DATE	APPD
	B	ADDED BORDER & TITLE BLOCK - NO CHANGE	2-10-78	RDB

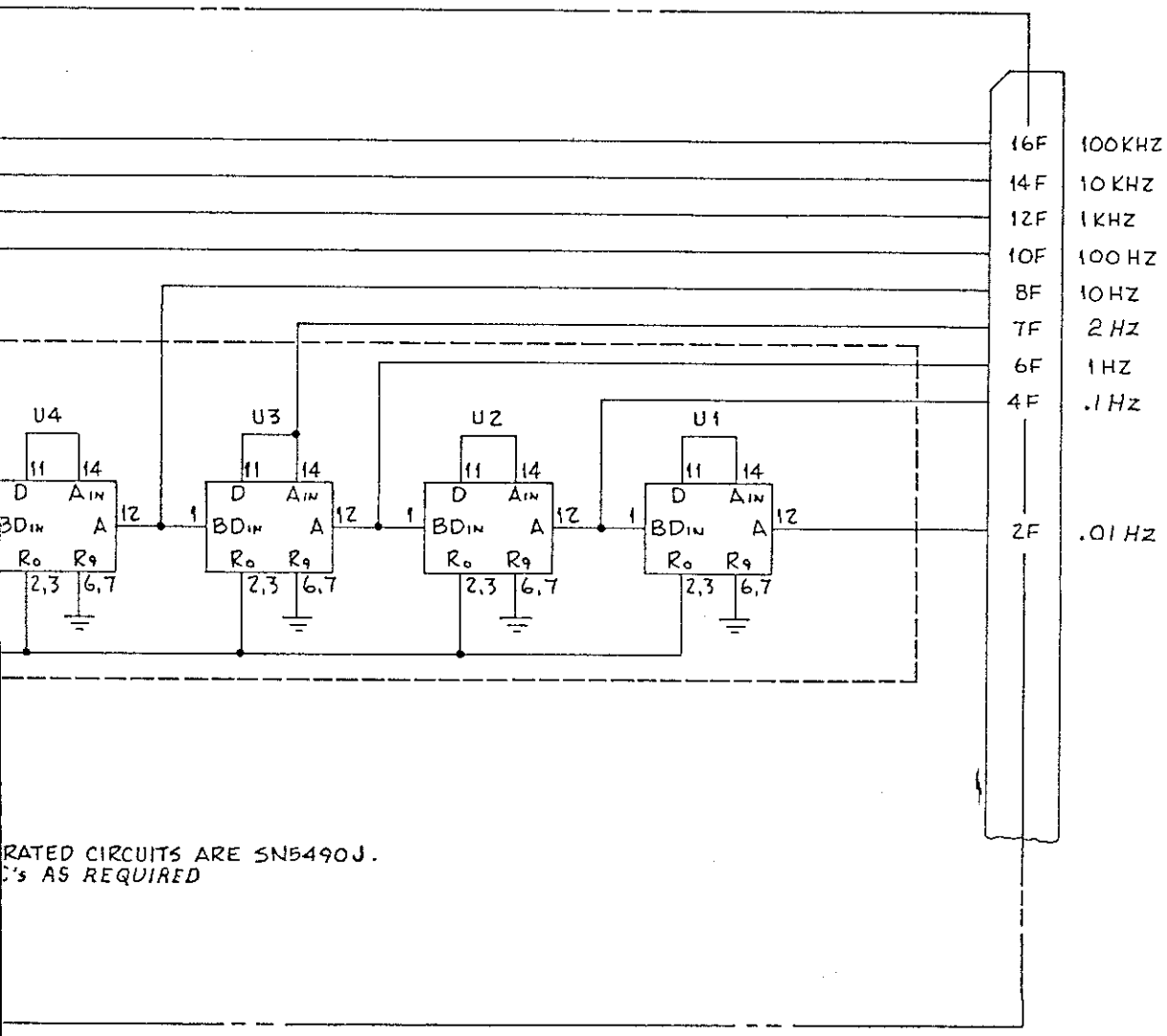

RATED CIRCUITS ARE SN5490J.
C's AS REQUIRED

A14	4-18	TOLERANCES UNLESS OTHERWISE SPECIFIED			AUSTRON INC AUSTIN, TEXAS
PCB6		DEC	FRAC	ANG	SCHEMATIC DIAGRAM - DIVIDER
REF DES	FIG NO	MATERIAL:			
ON		ENGR	C.J.B.	4-4-73	SIZE 2 / CODE IDENT NO 24672 / 123 94679 / B
		CHECK			
		DRFTMN	L.D.B.	4-4-73	SCALE N/A / SHEET 1 OF 1

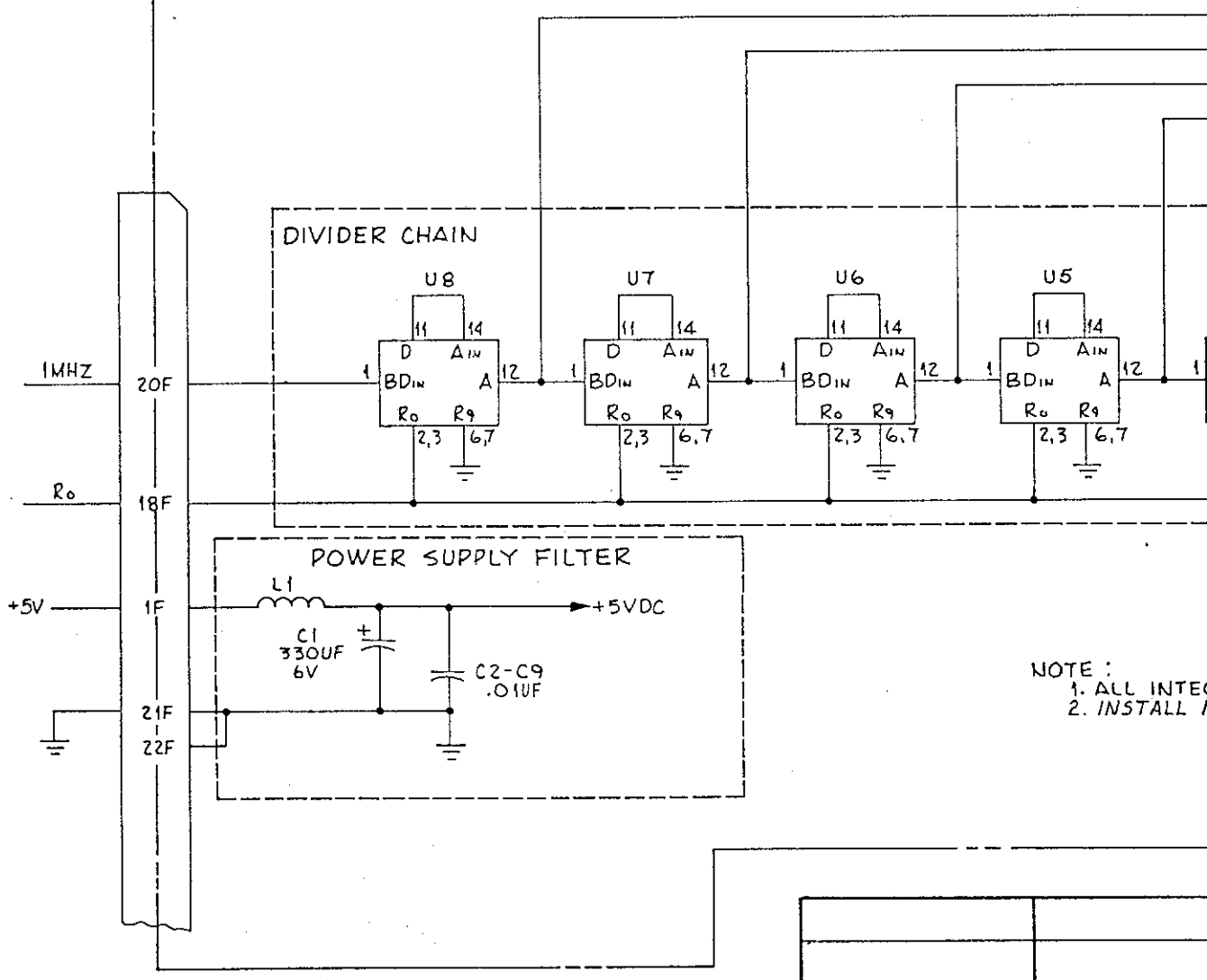

NOTE :
1. ALL INTEG
2. INSTALL

103 94603	1210D
	1210C
NEXT ASSY	USED ON
APPLICAT	

REVISIONS				
ZONE	LTR	DESCRIPTION	DATE	APPROVED
	B	ECO 974; DELETED SOCKETS; REDRAWN	12/29/75	RDB
	C	DELETED JUMPERS, BEADS, & .01 CAPS (C2 & C3) ASSOCIATED WITH U1 & U2 PER ECO 1465	5-18-76	RDB
	D	ECO 2088: SN 5490J WAS SN5490N	10-7-77	RDB
	E	ADD C2+C3, JUMPERS + TABLE ECO 2274	3-17-78	RDB

	103 94603	C4 THRU C9 AND U3 THRU U8 INSTALLED
*	103 94603-1	C3 AND U2 ADDED
*	103 94603-2	C2 AND C3, U1 AND U2 ADDED

ITEM NO	REF DES	PART NO	NOMENCLATURE	VENDOR

LIST OF MATERIAL

UNLESS OTHERWISE SPECIFIED DIMENSIONS ARE IN INCHES
DO NOT SCALE DRAWING

TOLERANCES
UNLESS OTHERWISE SPECIFIED

DEC	FRACT	ANG

ENGINEER	LLDh	12-75
CHECKED	RBrubaker	
DRAFTSMAN	K. Wignton	12/29/75

MATERIAL:

AUSTRON INC AUSTIN TEXAS

PC BOARD ASSY, DIVIDER

SIZE	CODE IDENT NO		
2	24672	103 94603 *	E

SCALE 1 / 1 SHEET 1 OF 1

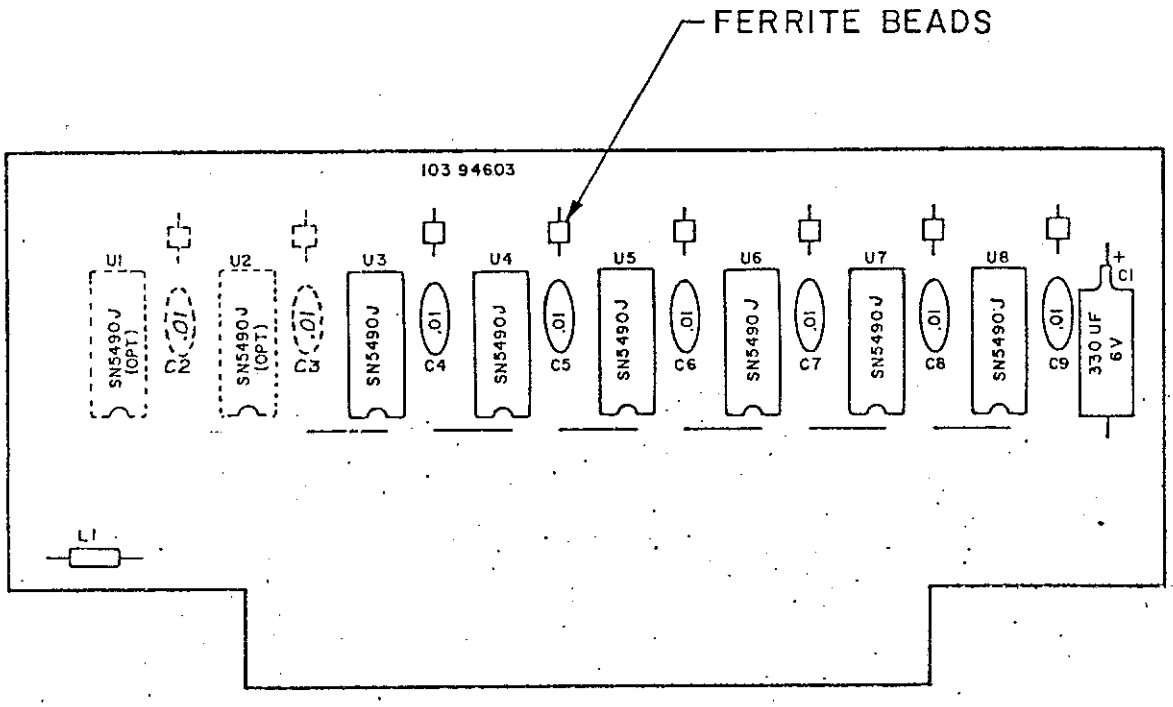

QTY REQ
-1

		271 94537 *	1210 C
A14	4-19	271 96208	1210 D
REF DES	FIG NO	NEXT ASSY	USED ON
		APPLICATION	

4.9 PULSE AMPLIFIER CARD

4.9.1 The Pulse Amplifier card (A13) contains four identical pulse shapers and line drivers.

4.9.2 U1 is a one-shot multivibrator which accepts a TTL signal from the Divider card. The output of the one-shot is a pulse of fixed duration, determined by R2 and C6. Q1, Q2, and Q3 form a line driver capable of delivering a 5 volt pulse to a 50 ohm load.

4.9.3 Only the required circuits will be connected in order to conserve power. Normally only one circuit will be used for 1 PPS.

REVISIONS				
ZONE	LTR	DESCRIPTION	DATE	APPD
	A	ADDED BORDER & TITLE BLOCK; SHEET SIZE WAS 2	2-10-78	RDS

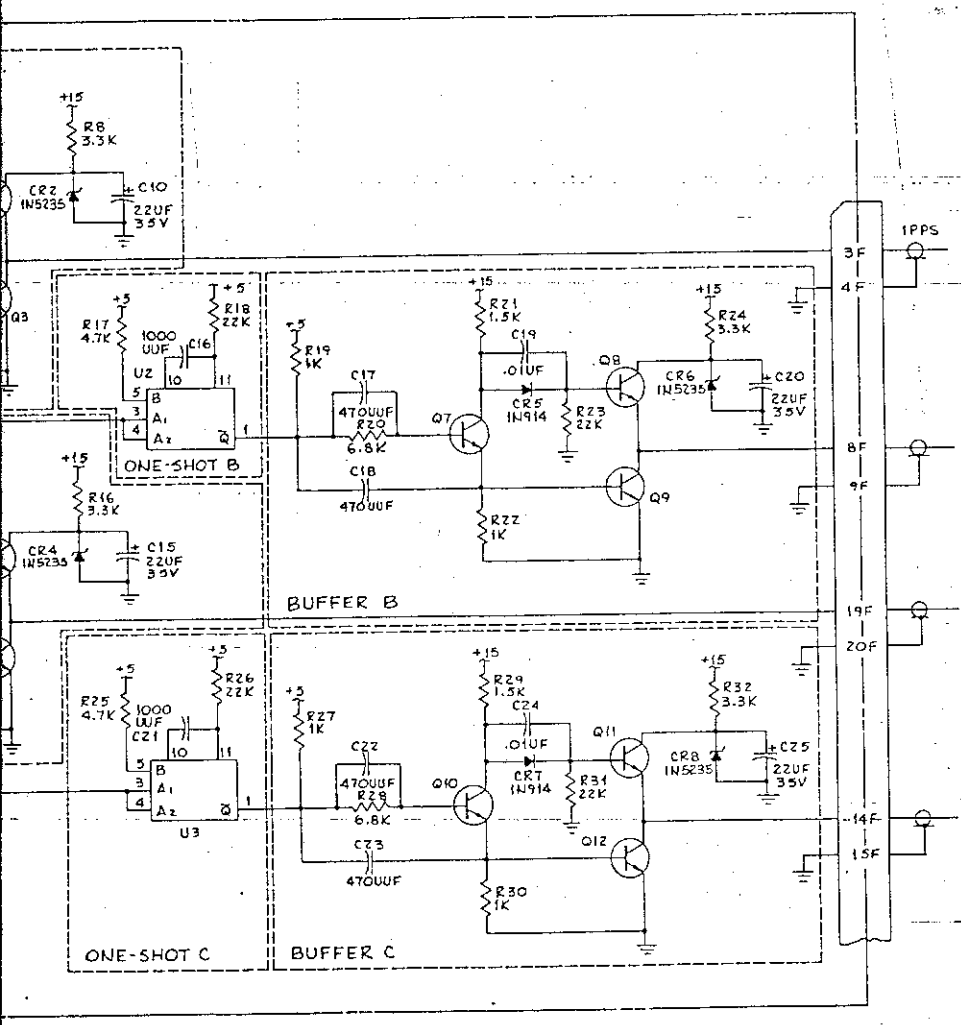

OTHERWISE SPECIFIED, ALL TRANSISTORS ARE 2N3904,
ARE SN54121J.

NEXT ASSY	USED ON	REF DES	FIG NO
10394595	1250A-02	A8 & A9	6-2
10394595	1210D	A13	4-20
10394595	1210C	PCB7	

APPLICATION

TOLERANCES UNLESS OTHERWISE SPECIFIED

DECIMALS	FRACTIONS	ANGLES

MATERIAL:

ENGR	C.J. BALZER	4-17-73
CHECK		
DRFTSMN	L.D. BECKER	4-17-73

AUSTRON INC.
AUSTIN, TEXAS

SCHEMATIC DIAGRAM - PULSE AMPLIFIER

SIZE	CODE IDENT NO		
3	24672	123 94695	A

SCALE N/A

SHEET 1 OF 1

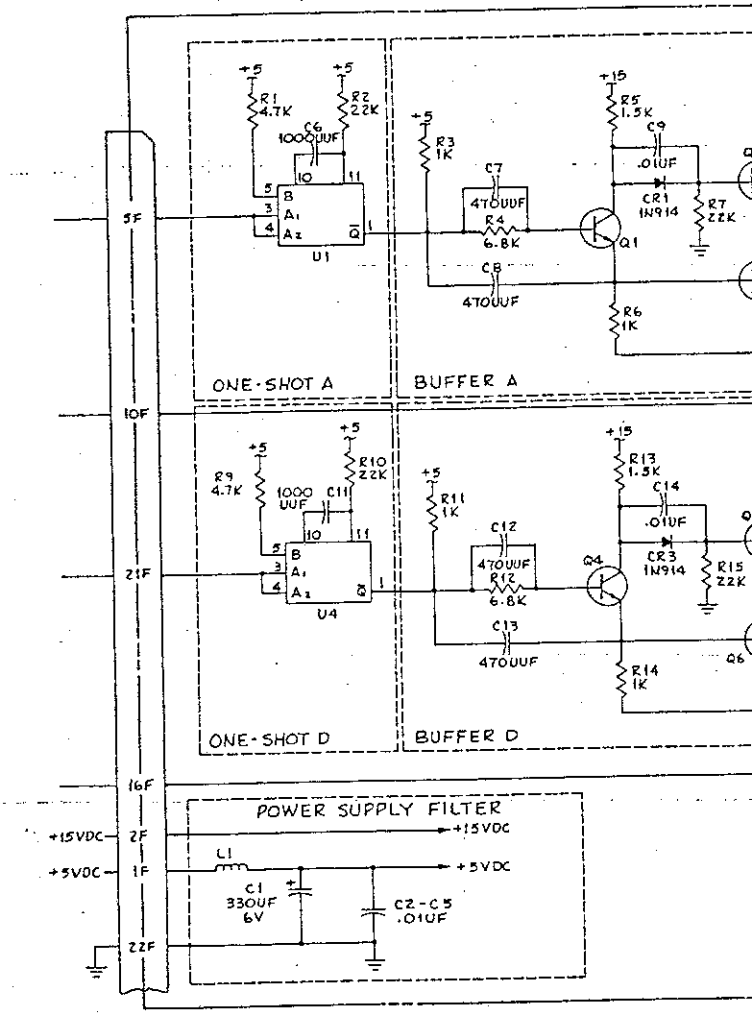

NOTES:
1. UNLESS
ALL IC

2 1

REVISIONS				
ZONE	LTR	DESCRIPTION	DATE	APPROVED
	A	REDRAWN TO ADD DASH NOS. PER ECO 1184	12-10-75	RDB
	B	ECO 1192. ADDED NOTE 2	1-6-76	JW
	C	CR2,4,6 & 8 TYPE NO. WAS 1N5235; ECO #1857	3-15-77	RDB
	D	703SN54121J WAS 703SN54121N PER ECO 2090	10-14-77	RDB
	E	REVISED PARTS LIST PER ECO. 2891	4-16-79	RDB
	F	ADDED NOTE 3 PER ECO. 3215	12-17-79	RDB
	G	REVISED P/L PER ECO. 3556	2-11-81	RDB

D

C

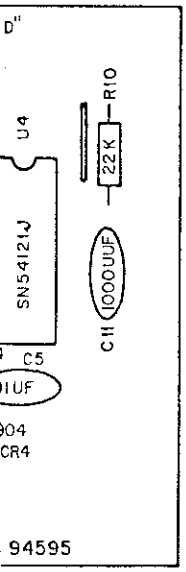

B

ITEM NO	REF DES	PART NO	NOMENCLATURE	VENDOR

LIST OF MATERIAL

UNLESS OTHERWISE SPECIFIED DIMENSIONS ARE IN INCHES
DO NOT SCALE DRAWING

TOLERANCES
UNLESS OTHERWISE SPECIFIED

DEC	FRACT	ANG

ENGINEER		
CHECKED	RDB	12-10-75
DRAFTSMAN	BARKER	12-10-75

MATERIAL:

AUSTRON INC AUSTIN TEXAS

P C BOARD ASSY.-
PULSE AMPLIFIER

A

SIZE	CODE IDENT NO		
2	24672	103 94595 *	G

SCALE 1:1 SHEET 1 OF 1

* FOR PART NO.	USE CIRCUIT
103 94595	ALL
103 94595-1	"A"
103 94595-2	"A" & "B"
103 94595-3	"A", "B" & "C"

SEE NOTE 2

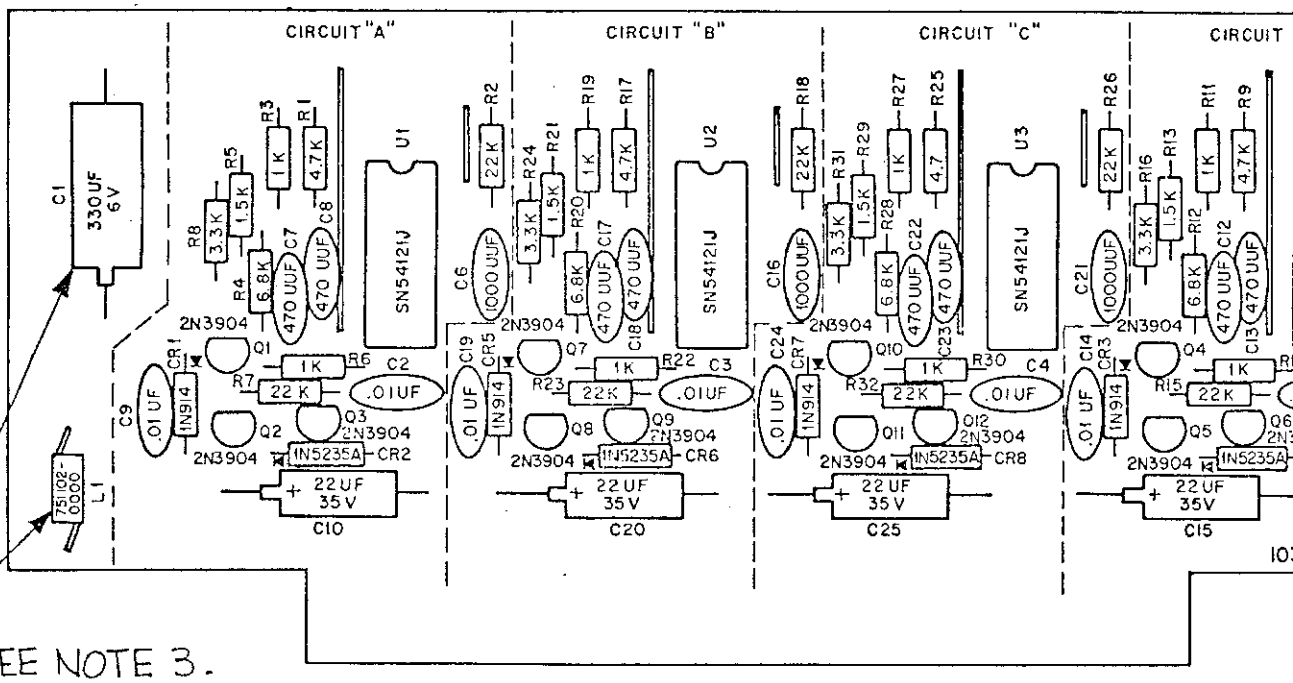

SEE NOTE 3.

3. INSTALL L1 AND C1 FOR ALL PART NUMBERS.
2. NO DASH VERSION USES 703SN74121N INSTEAD OF 703SN54121J.
* 1. IDENTIFY ASSEMBLY WITH APPROPRIATE PART NUMBER PER CHART ABOVE.

NOTES:

QTY REQD
-1

A8 & A9	6-3	25497307-2	1250A-02
A13	4-21	271 96208	1210D
REF DES	FIG NO	NEXT ASSY	USED ON
		APPLICATION	

4.10 TOD CONTROL AND DISPLAY

4.10.1 The Model 1210D TOD Display, which is composed of assemblies A4, A5 and various controls which are mounted on the front panel, is covered by a single description and schematic.

4.10.2 The model 1210D A4 assembly contains six dividers, U11 through U16, and six decoder/driver/displays, U21 through U26. The A5 assembly contains a quad 2-line to 1-line data selector, U12; a one shot, U23; a flip flop, U22; and various gates.

4.10.3 In the RUN mode, a 1 PPS signal from the clock divider is processed by the sliver generator, composed of A5Q1, A5Q2, and A5U11D, and applied to the A1 input of the data selector, A5U12. The Y1 output of A5U12 drives the units seconds divider, A4U11, which is decoded and displayed by A4U21. The OD output of A4U11 drives the tens of seconds divider A4U12, which is decoded and displayed by A4U22. When a six is present at the outputs of A4U12, it is detected by gate A5U11A which furnishes a pulse to the reset gate A5U11B and to the A2 input of the data selector, A5U12. The Y2 output of A5U12 drives the units minutes and tens of minutes dividers and decoder/displays in similar manner. Gate A5U13A functions like gate A5U11A by furnishing a pulse both to the reset gate A513B and to the A3 input of the data selector, A5U12. The Y3 output of A5U12 drives the units hours divider A4U15, whose output is decoded and displayed by A4U25. The OD output of A4U15 drives the tens of hours divider A4U16 whose output is decoded and displayed by A4U26. The units hours and tens of hours dividers A4U15 & 16, are cascaded together to form a divide by twenty-four stage: the QC output of A4U15 and the QB output of A4U16 are detected by gate A513D and applied to the reset gate A513C, which then reset both A5U15 and A5U16. The A4 input of the data selector A5U12 receives a 1 PPS signal from A5Q2, and the Y4 output drives the 1 SEC lamp A2DS1.

4.10.4 In the SET mode an $\overline{\text{ENABLE}}$ will be present at A2S6A from the clock arm circuit. When switch A2S6A is placed in the SET position (up), the Q output of A5U22A goes high. This is connected to the select input of the data selector A5U12 and selects the B inputs, thereby isolating the seconds, minutes and hours counters. The divider A5U22B receives a 10 PPS signal from the clock divider and divides it by two. The resulting 5 PPS is applied to the one-shot A5U23B, whose time constant is approximately one μsecond. The one μsecond 5 PPS signal is present at gates A5U11C, A5U21D, and A5U21C, which are controlled by switches A2S4, A2S3, and A2S2 respectively. These switches allow the 5 PPS rate to be applied to the seconds, minutes, or hours counter, as selected.

4.10.5 The one-shot A5U23A is used to enable the clock display when an ac signal is present to retrigger the one-shot or when the demand button is pushed during standby operation. The time constant for A5U23A is approximately 8 seconds. Switch A2S6B will turn on display regardless of the state of A5U23A.

REVISIONS				
ZONE	LTR	DESCRIPTION	DATE	APPROVED
	—	RELEASED	10-10-75	RJB
	A	GENERAL REVISION PER ECO # 1185	12-11-75	RDB
	B	ECO #275 (1) Q4 WAS 5192 (2) Q3 WAS 3904 (3) R14 WAS 4.7K (4) R15 WAS 47Ω	2-17-76	RDB
	C	C1 WAS 750 UF, R12 WAS 47K, U23 WAS SN54LS123J PER ECO 4154	6-24-82	RDB

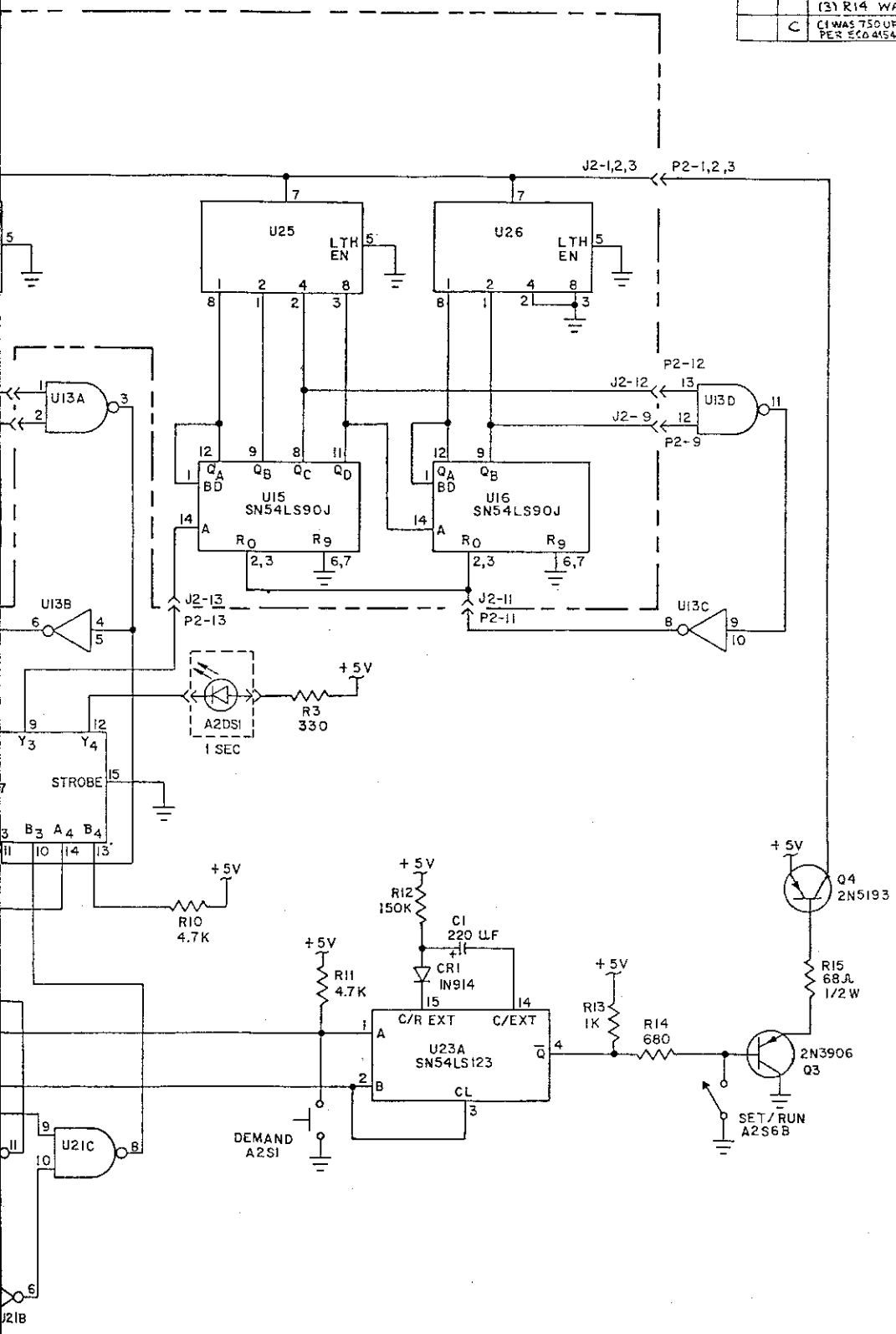

103 96188	1210D	A4/A5	4-22
NEXT ASSY	USED ON	REF DES	FIG NO
APPLICATION			

TOLERANCES UNLESS OTHERWISE SPECIFIED

DECIMALS	FRACTIONS	ANGLES

MATERIAL:

ENGR	L.L. ISERT, JR	10-10-75
CHECK	R. BARKER	10-10-75
DRFTSMN	K. WIGINTON	10-6-75

AUSTRON INC.
AUSTIN, TEXAS

SCHEMATIC DIAGRAM - TOD CONTROL/TOD DISPLAY

SIZE	CODE IDENT NO		
4	24672	123 96189	C

SCALE N/A | SHEET 1 OF 1

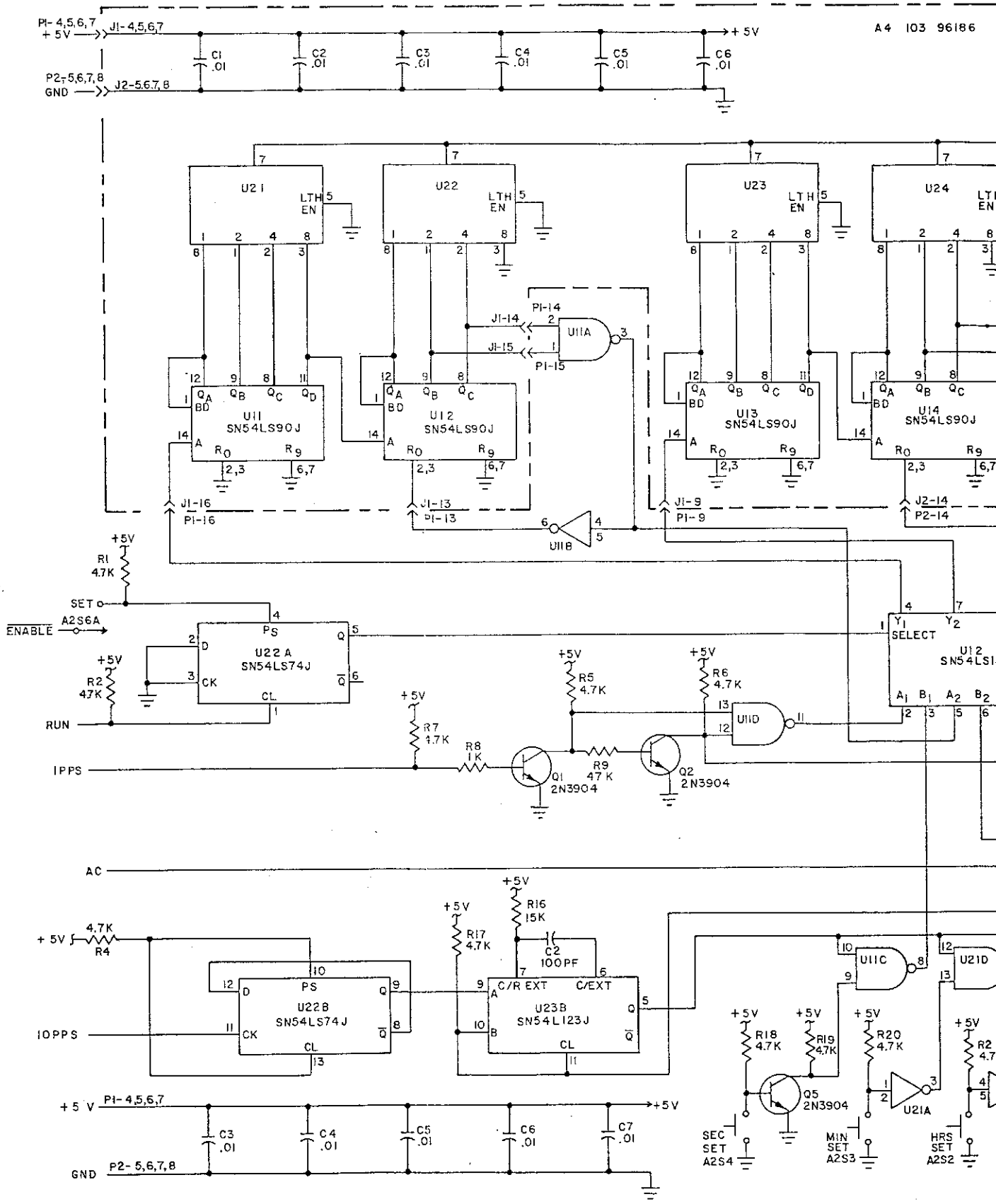

4. LAST REFERENCE DESIGNATOR USED: R21, C7, Q5, DS1, CR1, S6
3. ALL GATES AND INVERTERS ARE SN54LS00J
2. ALL RESISTORS ARE 1/8 W, 10 % COMP
1. ALL COMPONENTS ARE PART OF A5 103 96188

NOTES: UNLESS OTHERWISE SPECIFIED

2 1

REVISIONS				
ZONE	LTR	DESCRIPTION	DATE	APPD
	—	RELEASED	9-29-75	RDB
	A	REVISED SILKSCREEN PER ECO # 1186	12-16-75	RDB
	B	Q3 WAS 3904; Q4 WAS 5192; R14 WAS 4.7K; R15 WAS 47; PER ECO # 1275	2-17-76	RDB
	C	REVISED PARTS LIST PER ECO. 2888	4-16-79	RDB
	D	C1 WAS 750UF, R12 WAS 47K, U23 WAS SN54L123J PER ECO 4154	6-24-82	RDB
	E	ADDED TO THE PL #65110-0473 ECO4879	12-21-83	RDB

D

C

B

A

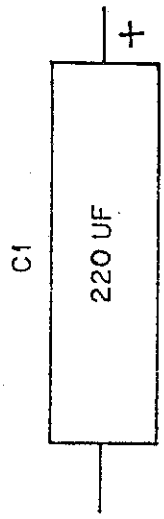

3 103 96188

16-0013
REQD
NOTE 1)

A5	4-23	TOLERANCES UNLESS OTHERWISE SPECIFIED			AUSTRON INC. AUSTIN, TEXAS
REF DES	FIG NO	DEC	FRAC	ANG	PC BOARD ASSY - TOD CONTROL
N		MATERIAL:			
		ENGR	L.ISERT	9-29-75	SIZE 2 / CODE IDENT NO 24672 / 103 96188 / E
		CHECK	R.BARKER	9-29-75	
		DRFTMN	R.BARKER	9-20-75	SCALE 2:1 / SHEET 1 OF 1

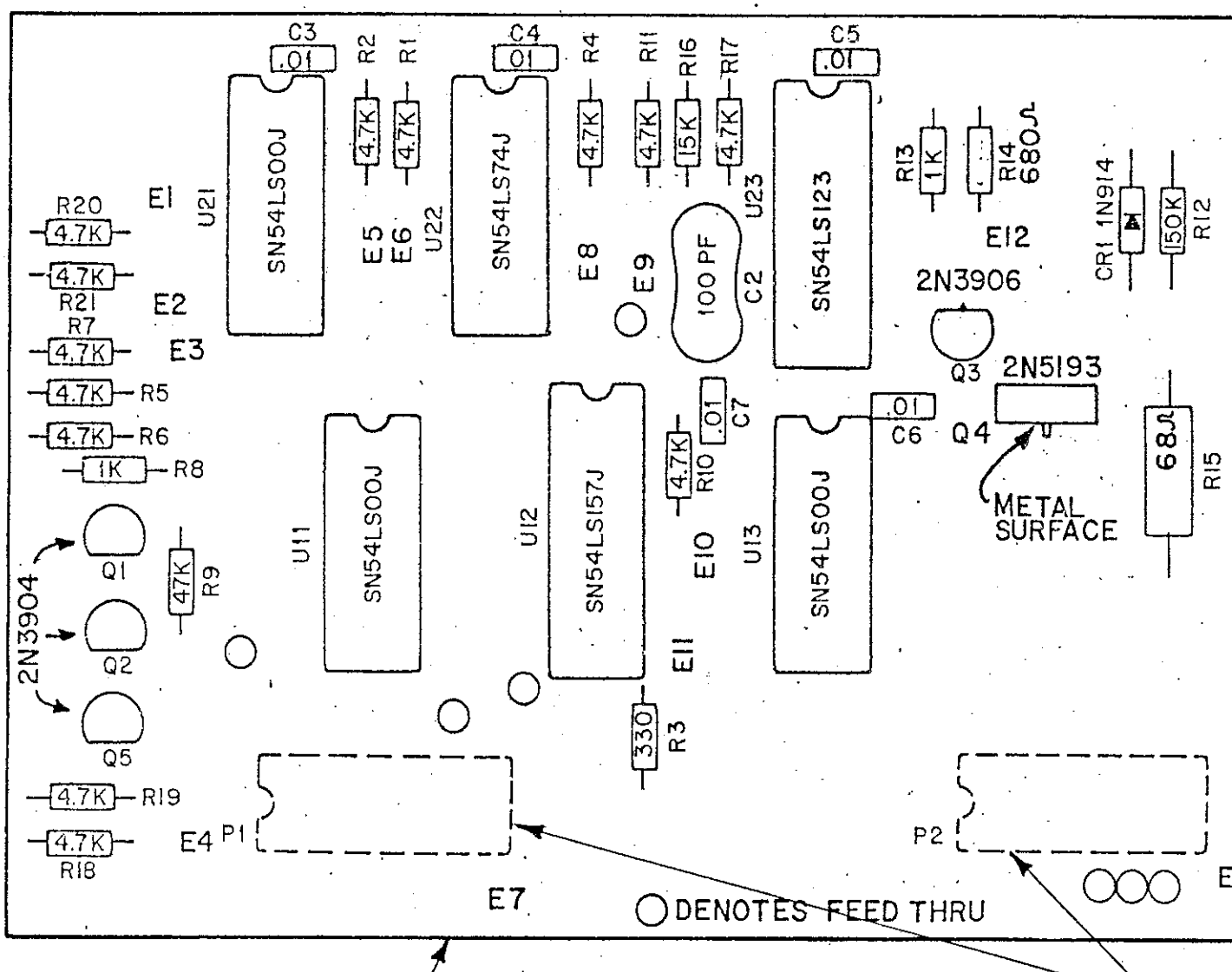

109 96193	1210D
NEXT ASSY	USED ON
APPLICATI	

1. INSTALL IC PLATFORMS ON FAR SIDE OF BOARD.

NOTES:

2 1

REVISIONS

ZONE	LTR	DESCRIPTION	DATE	APPROVED
	—	RELEASED	9-29-75	RDB
	A	REVISED TITLE BLOCK TO INCLUDE REF DES & FIG. NO; SCALE WAS 1:1; PER ECO 2221	2-13-78	RDB
	B	ADD NOTE 2 PER ECO 2310	3-16-78	RDB
	C	REVISED PARTS LIST PER ECO. 2887	4-16-79	RDB

D

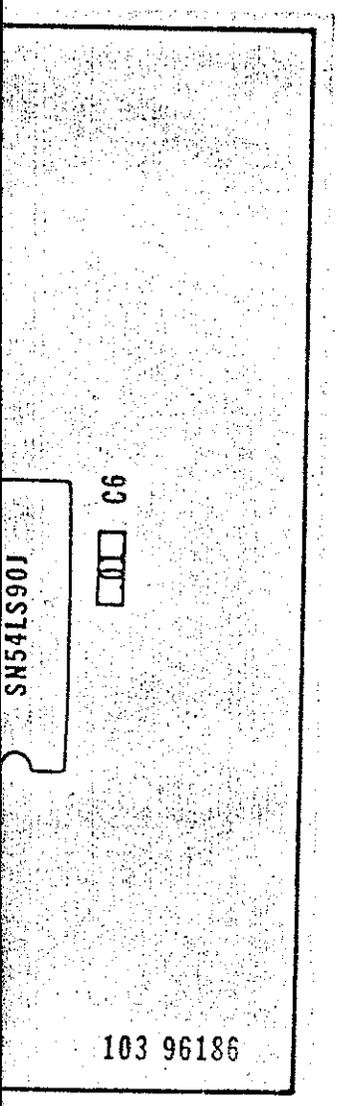

C

B

A

A4	4-24
REF DES	FIG NO
ON	

TOLERANCES
UNLESS OTHERWISE SPECIFIED

DEC	FRAC	ANG

MATERIAL:

ENGR	L.L.I., JR.	9-29-75
CHECK	R.D.B.	9-29-75
DRFTMN	BARKER	9-20-75

AUSTRON INC.
AUSTIN, TEXAS

PC BOARD ASSY -
TOD DISPLAY

SIZE	CODE IDENT NO		
2	24672	103 96186	C
SCALE 2:1		SHEET 1 OF 1	

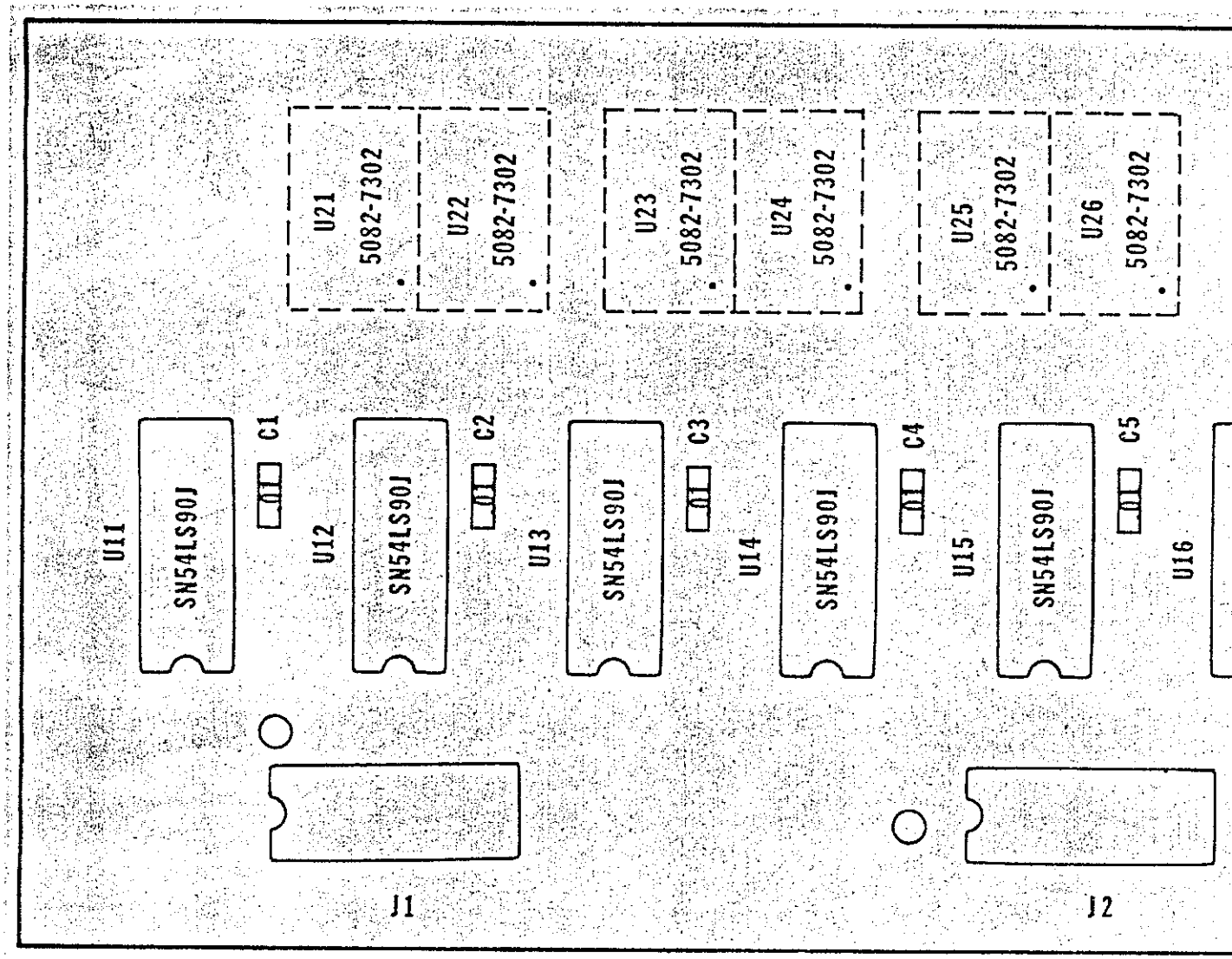

2 ALL SIX LED DISPLAYS MUST BE SELECTED TO HAVE THE SAME LUMINOUS INTENSITY CATEGORY.

1. CIRCLE DENOTES FEED-THRU

NOTES:

10996193	1210D
NEXT ASSY	USED ON
APPLICAT	

4.11 INTERNAL OSCILLATOR

4.11.1 The AUSTRON Sulzer Model 1150 oscillator (A9) employs a high quality 5 MHz, fifth-overtone, high-temperature bake-out crystal unit which exhibits exceptional retrace and long-term aging characteristics. The crystal is mounted in another proportionally controlled oven. This arrangement assures almost complete freedom from frequency shifts due to environmental temperature changes. A high-gain AGC system is used to keep the crystal drive level constant, assuring excellent long-term aging.

NOTE: The AUSTRON Model 1150 is a sealed unit, and as such, is not field repairable. If this assembly is found to be in need of repair, return it to AUSTRON, Inc. (see section 6.0).

5.0 MAINTENANCE

5.1 SCOPE OF SECTION

5.1.1 This maintenance section of this manual provides the technician with a general approach to maintaining the model 1210D. Included are trouble analysis guides and general maintenance procedures.

5.2 TROUBLE ANALYSIS GUIDES

5.2.1 Specific information is provided in the following:

	SYMPTOM	PROBABLE CAUSE
1)	(PWR Lamp) 1A2DS3 fails to light.	1. AC power not available. 2. Power switch not ON. 3. Power cord not connected. 4. 230 V selected when using 115 V. 5. Lamp is burned out.
2)	Charge lamp fails to light (1A2DS4) when line lamp is on.	1. Lamp burned out. 2. Switch 1A2S11 open.
3)	BATT circuit test reads high.	1. Blown 1A10F2. 2. Open 1A2S10. 3. Battery pack open.
4)	OVEN circuit test reads low.	1. Oscillator is in warm-up stage. 2. Supply voltage to oscillator is low. 3. Defective oscillator.
5)	RF circuit test reads low.	1. Check output of oscillator; should be 1 V RMS, unloaded.

	SYMPTOM	PROBABLE CAUSE
6)	All meter functions not correct.	1. Bad power supplies. 2. Meter 1A2M1 is bad. 3. Switch 1A2S5 is bad.
7)	ARM lamp will not light after placing switch 1A2S7 in the ARM (up) position.	1. Switch 1A2S7 is bad. 2. ARM lamp 1A2DS2 is burned out. 3. Logic on TIME SYNC pcb (A15) not functional.
8)	Cannot set TOD display.	1. Clock is not ARMed. 2. ARM circuit not functional. 3. SET/RUN switch (1A2S6) not in SET position. 4. 10 PPS input not present on TOD gating circuitry (A5). 5) TOD control pcb/(A5) not functional.
9)	1 SEC lamp (1A2DS1) does not flash each second.	1) SET/RUN switch (1A2S6) not put into RUN position while clock was ARMed. 2) Lamp (1A2DS1) is burned out. 3) 1 PPS not available from clock logic.
10)	TOD display not incrementing time.	1) Display not functioning because ac not prsent. Press DEMAND pushbutton. 2) 1 PPS from clock logic not available. 3) Clock not placed in the RUN mode with the clock ARMed. 4) TOD CONTROL pcb not functional. 5) Divider on TOD DISPLAY pcb not functional.

5.2.1 (Cont'd.)

	SYMPTOM	PROBABLE CAUSE
11)	Clock output cannot be slewed.	1. Clock not ARMed. 2. Slew rates not available from divider chain. 3. Switch 1A2S9 open. 4. Switch 1A2S8 open. 5. TIME SYNC pcb (A15) not functional.
12)	Clock will not sync.	1. Clock not ARMed. 2. External SYNC pulse not available. at connector 1A2J1. 3. TIME SYNC pcb (A15) not functional.
13)	Sine Wave output not present.	1. Check associated buffer card. 2. Check associated output filter.
14)	Pulse output not present.	1. Check PULSE AMPLIFIER pcb. 2. Check DIVIDER pcb.
15)	No clock outputs are functional.	1. OSC switched to EXT. STD. input. 2. Power supply is bad.
16)	Cannot adjust coarse frequency.	1. Tuning tool broken. 2. Defective oscillator.
17)	Batteries will not operate unit for 8 hours.	1. Not charged for 16 hours. 2. High charging circuit not delivering 500 to 750 mA. 3. Replace batteries.

5.3 GENERAL MAINTENANCE

5.3.1 Check capacity of Nicad batteries every six months. Deep discharge and recharge for 16 hours. When batteries do not give required standby capacity replace them. (See paragraph 1.3.1.2.)

5.3.2 No other periodic maintenance is required.

6.0 REPLACEABLE PARTS

6.1 SCOPE OF SECTION

6.1.1 The following is a list of replaceable parts which includes the reference designator, description, and AUSTRON Part Number. For convenience in ordering from local suppliers, the manufacturer's part number and the manufacturer's Federal Identification Code (FIC) are also given where applicable.

6.2 ORDERING REPLACEMENT PARTS

6.2.1 To order replacement parts from AUSTRON, Inc. address order to:

Austron Inc.
P.O. Box 14766
Exit 248, N. IH-35
Austin, Texas 78761

Specify for each part; 1)model and serial number of the instrument from the rear panel label, 2)complete circuit reference designator, 3)AUSTRON part number, 4)description.

6.2.2 To order parts not listed, add a complete description of function of part and location.

6.2.3 Part numbers as shown will change occasionally as vendor items are re-evaluated or as improved components become available. The equivalent part currently used in production at the time orders are received will be shipped. Where manufacturer's part number or FIC is missing, any reputable manufacturer's part of the appropriate value, indicated in the description, may be used.

6.2.4 The circuit reference designator includes the reference designator prefix in the page heading plus the reference designator for the individual part. If, for example, the reference designator prefix for a circuit board assembly is 1A4A7 and the desired componenet is capacitor C1, the complete circuit reference designator would be 1A4A7C1.

MANUAL PARTS LIST MODEL 1210D 24 OCT 84

ASSEMBLY CRYSTAL CLOCK, MODEL 1210D
ASSEMBLY NUMBER 32196206
REFERENCE DESIGNATOR PREFIX
QUANTITY 1 EA

REF DES	PART DESCRIPTION	AUSTRON PART	MFG PART	FIC
	PCB ASSY, EXTENDER	10393765		24672
	MANUAL	12796207		24672
	CLAMP, AN3057-6	551013-0006	AN3057-6	81352
	CONN, STRAIGHT 3 SOCKET CONTACT	551106-0017	MS3106A-14S-1S	96906
	TUNING WAND	901000-8605	8605	20018
1	FINAL ASSY, MODEL 1210D	27196208		24672

ASSEMBLY FINAL ASSY, MODEL 1210D
ASSEMBLY NUMBER 27196208
REFERENCE DESIGNATOR PREFIX 1
QUANTITY 1 EA

REF DES	PART DESCRIPTION	AUSTRON PART	MFG PART	FIC
A1	NOT USED			
A2	PANEL ASSY, FRONT	10996193		24672
A3	PCB ASSY, OUTPUT FILTER	10396735		24672
A4	PCB ASSY, TOD DISPLAY	10396186		24672
A5	PCB ASSY T.O.D. CONTROL	10396188		24672
A6	PLATE ASSY (A6)	11096211		24672
A7	PC BOARD ASSY-BRIDGE	10394664		24672
A8	BATTERY PACK ASSY	12096212		24672
A9	XTLOSC, 1150 (70-85 DEG)	30296818		24672
A10	PANEL ASSY, REAR	10996195		24672
A11	PCB ASSY, DC FILTER	10396200		24672
A12	PCB ASSY, INTERCONNECT	10396769		24672
A13	PC BOARD ASSY-PULSE AMPLIFIER	10394595-1		24672
A14	PC BOARD ASSY, DIVIDER	10396614		24672
A15	PCB ASSY, TIME SYNC	10394618		24672
A16	PC BOARD ASSY. +5 VDC REGULATOR	10394607		24672
A17	PCB ASSY, +15 VDC REGULATOR	10396197		24672
A18	PCB ASSY, SINE CONVERTER	10396025-1		24672
A19	PCB ASSY OUTPUT AMPLIFIER	10396031-1		24672
MP1	COVER, FRONT	00794304		24672
MP2	COVER-INSTRUMENT	00796209-1		24672
MP3	COVER-INSTRUMENT	00796209-2		24672
MP4	BAR RECTANGULAR	01096753		24672
MP5	.171X1/4X1/2 SPACER ROUND	520830-0005	9228-SS171-0	06540
MP6	.171X1/4X1/2 SPACER ROUND	520830-0005	9228-SS171-0	06540
MP7	.171X1/4X1/2 SPACER ROUND	520830-0005	9228-SS171-0	06540
MP8	.171X1/4X1/2 SPACER ROUND	520830-0005	9228-SS171-0	06540
MP9	WASHER, PRELOAD	02096741		24672
MP10	WASHER, PRELOAD	02096741		24672
MP11	WASHER, PRELOAD	02096741		24672
MP12	WASHER, PRELOAD	02096741		24672
MP14	SHOCK MOUNT BUSHING	520205-0005	10R4-1501B	14519
MP15	SHOCK MOUNT BUSHING	520205-0005	10R4-1501B	14519

ASSEMBLY FINAL ASSY, MODEL 1210D (CONT)
ASSEMBLY NUMBER 27196208
REFERENCE DESIGNATOR PREFIX 1
QUANTITY 1 EA

REF DES	PART DESCRIPTION	AUSTRON PART	MFG PART	FIC
MP16	SHOCK MOUNT BUSHING	520205-0005	10R4-1501B	14519
MP17	SHOCK MOUNT BUSHING	520205-0005	10R4-1501B	14519
MP18	SHOCK DRIVE WASHER	520205-0010	10R41500	14519
MP19	SHOCK DRIVE WASHER	520205-0010	10R41500	14519
MP20	SHOCK DRIVE WASHER	520205-0010	10R41500	14519
MP21	SHOCK DRIVE WASHER	520205-0010	10R41500	14519
MP22	BUMPER, RUBBER W/HARDWARE	520210-2198	2198	83330
MP23	BUMPER, RUBBER W/HARDWARE	520210-2198	2198	83330
MP24	BUMPER, RUBBER W/HARDWARE	520210-2198	2198	83330
MP25	BUMPER, RUBBER W/HARDWARE	520210-2198	2198	83330

ASSEMBLY PANEL ASSY, FRONT
ASSEMBLY NUMBER 10996193
REFERENCE DESIGNATOR PREFIX 1A2
QUANTITY 1 EA

REF DES	PART DESCRIPTION	AUSTRON PART	MFG PART	FIC
DS1	1.2 MCD 20MA T1 3/4 LED RED	555600-4403	HLMP-0102	28480
DS2	LAMP, RED 28V	555008-0002	BP62-RCB-1762	03797
DS3	LAMP, GRN 28V	555008-0004	BP62-GCB-1762	03797
DS4	LAMP, YEL 28V	555008-0005	BP62-ACB-1762	03797
J1	CONNECTOR BNC	551100-7935	KC79-35	11636
J2	CONNECTOR BNC	551100-7935	KC79-35	11636
J3	CONNECTOR BNC	551100-7935	KC79-35	11636
J4	CONNECTOR BNC	551100-7935	KC79-35	11636
J5	CONNECTOR BNC	551100-7935	KC79-35	11636
S1	SWITCH, PSHBTN, SPST-NO	553012-0001	30-1	81073
S2	SWITCH, PSHBTN, SPST-NO	553012-0001	30-1	81073
S3	SWITCH, PSHBTN, SPST-NO	553012-0001	30-1	81073
S4	SWITCH, PSHBTN, SPST-NO	553012-0001	30-1	81073
S5	SWITCH, ROTARY	553905-3601	50CD3601-2-AJN	81073
S6	SW, TOGGLE DPDT	553010-0006	MST-205N	95146
S7	SW, TOGGLE SPDT CENTER OFF	553304-0006	7105SY2QE	09353
S8	SW, TOGGLE SPDT CENTER OFF	553304-0006	7105SY2QE	09353
S9	SWITCH, ROTARY	553905-3601	50CD3601-2-AJN	81073
S10	SW, TOGGLE DPDT	553010-0006	MST-205N	95146
S11	SW, TOGGLE DPDT	553010-0006	MST-205N	95146
M1	METER, 0-100UA	557000-0020	1S-DUA-100	32171
MP1	FILTER POLAROID	02096755		24672
MP2	DIAL KNOB TURNS COUNTING	505010-0462	RD462	75042
R1	10 K 2 W 5 RES VAR W.W.	659275-0103	534-103	02111

MANUAL PARTS LIST MODEL 1210D 24 OCT 84

ASSEMBLY PCB ASSY, OUTPUT FILTER
ASSEMBLY NUMBER 10396735
REFERENCE DESIGNATOR PREFIX 1A3
QUANTITY 1 EA

REF DES	PART DESCRIPTION	AUSTRON PART	MFG PART	FIC
C1	470 PF 500V 5 CAP DIP MICA	603000-0471	CM05FD471J03	81349
C2	3300 PF 500V 5 CAP DIP MICA	603000-0332	CM06FD332J03	81349
C3	3300 PF 500V 5 CAP DIP MICA	603000-0332	CM06FD332J03	81349
L1	MHZ CHOKE	75196737		24672
L2	1 MHZ CHOKE	75196736		24672
L3	1 MHZ CHOKE	75196736		24672

ASSEMBLY PCB ASSY, TOD DISPLAY
ASSEMBLY NUMBER 10396186
REFERENCE DESIGNATOR PREFIX 1A4
QUANTITY 1 EA

REF DES	PART DESCRIPTION	AUSTRON PART	MFG PART	FIC
C1	.01 UF 50 V 20 CAP CERAMIC	601100-0103	CY15C103M	71590
C2	.01 UF 50 V 20 CAP CERAMIC	601100-0103	CY15C103M	71590
C3	.01 UF 50 V 20 CAP CERAMIC	601100-0103	CY15C103M	71590
C4	.01 UF 50 V 20 CAP CERAMIC	601100-0103	CY15C103M	71590
C5	.01 UF 50 V 20 CAP CERAMIC	601100-0103	CY15C103M	71590
C6	.01 UF 50 V 20 CAP CERAMIC	601100-0103	CY15C103M	71590
U11	IC DECADE COUNTER	703SN54LS90J	SN54LS90J	01295
U12	IC DECADE COUNTER	703SN54LS90J	SN54LS90J	01295
U13	IC DECADE COUNTER	703SN54LS90J	SN54LS90J	01295
U14	IC DECADE COUNTER	703SN54LS90J	SN54LS90J	01295
U15	IC DECADE COUNTER	703SN54LS90J	SN54LS90J	01295
U16	IC DECADE COUNTER	703SN54LS90J	SN54LS90J	01295
U21	LED NUM. DISPLAY 0.3IN LHDP W/LATCH	555600-7302	5082-7302	28480
U22	LED NUM. DISPLAY 0.3IN LHDP W/LATCH	555600-7302	5082-7302	28480
U23	LED NUM. DISPLAY 0.3IN LHDP W/LATCH	555600-7302	5082-7302	28480
U24	LED NUM. DISPLAY 0.3IN LHDP W/LATCH	555600-7302	5082-7302	28480
U25	LED NUM. DISPLAY 0.3IN LHDP W/LATCH	555600-7302	5082-7302	28480
U26	LED NUM. DISPLAY 0.3IN LHDP W/LATCH	555600-7302	5082-7302	28480
X1	SOCKET, I.C. 16-PIN	551026-0860	1-380860-1	04618
X2	SOCKET, I.C. 16-PIN	551026-0860	1-380860-1	04618

MANUAL PARTS LIST MODEL 1210D 24 OCT 84

ASSEMBLY PCB ASSY T.O.D. CONTROL
ASSEMBLY NUMBER 10396188
REFERENCE DESIGNATOR PREFIX 1A5
QUANTITY 1 EA

REF DES	PART DESCRIPTION	AUSTRON PART	MFG PART	FIC
C1	220 UF 10V 10 CAP TANT	608021-0227	CS13BC227K	81349
C2	100 PF 500V 5 CAP DIP MICA	603000-0101	DM15-101J	02799
C3	.01 UF 50 V 20 CAP CERAMIC	601100-0103	CY15C103M	71590
C4	.01 UF 50 V 20 CAP CERAMIC	601100-0103	CY15C103M	71590
C5	.01 UF 50 V 20 CAP CERAMIC	601100-0103	CY15C103M	71590
C6	.01 UF 50 V 20 CAP CERAMIC	601100-0103	CY15C103M	71590
C7	.01 UF 50 V 20 CAP CERAMIC	601100-0103	CY15C103M	71590
CR1	75 PRV DIO S SIG	7011N914	1N914	81349
P1	PLATFORM 16 DIP	551016-0013	616-AG1	91506
P2	PLATFORM 16 DIP	551016-0013	616-AG1	91506
Q1	0.31W TO-92 XSTR NPNS SH	7022N3904	2N3904	81349
Q2	0.31W TO-92 XSTR NPNS SH	7022N3904	2N3904	81349
Q3	0.31W TO-92 XSTR PNPS SH	7022N3906	2N3906	81349
Q4	40 W CASE 77-1 XSTR PNPS AP	7022N5193	2N5193	81349
Q5	0.31W TO-92 XSTR NPNS SH	7022N3904	2N3904	81349
R1	4.7 K 1/8W 10 RES FXD COMP	651110-0472	RC05GF472K	81349
R2	4.7 K 1/8W 10 RES FXD COMP	651110-0472	RC05GF472K	81349
R3	330 OHM 1/8W 10 RES FXD COMP	651110-0331	RC05GF331K	81349
R4	4.7 K 1/8W 10 RES FXD COMP	651110-0472	RC05GF472K	81349
R5	4.7 K 1/8W 10 RES FXD COMP	651110-0472	RC05GF472K	81349
R6	4.7 K 1/8W 10 RES FXD COMP	651110-0472	RC05GF472K	81349
R7	4.7 K 1/8W 10 RES FXD COMP	651110-0472	RC05GF472K	81349
R8	1 K 1/8W 10 RES FXD COMP	651110-0102	RC05GF102K	81349
R9	47 K 1/8W 10 RES FXD COMP	651110-0473	RC05GF473K	81349
R10	4.7 K 1/8W 10 RES FXD COMP	651110-0472	RC05GF472K	81349
R11	4.7 K 1/8W 10 RES FXD COMP	651110-0472	RC05GF472K	81349
R12	150 K 1/8W 10 RES FXD COMP	651110-0154	RC05GF154K	81349
R13	1 K 1/8W 10 RES FXD COMP	651110-0102	RC05GF102K	81349
R14	680 OHM 1/8W 10 RES FXD COMP	651110-0681	RC05GF681K	81349
R15	RES FXD COMP 68 OHM 1/2W 05%	651101-0680	RC20GF680J	81349
R16	15 K 1/8W 10 RES FXD COMP	651110-0153	RC05GF153K	81349
R17	4.7 K 1/8W 10 RES FXD COMP	651110-0472	RC05GF472K	81349
R18	4.7 K 1/8W 10 RES FXD COMP	651110-0472	RC05GF472K	81349

ASSEMBLY PCB ASSY T.O.D. CONTROL (CONT)
ASSEMBLY NUMBER 10396188
REFERENCE DESIGNATOR PREFIX 1A5
QUANTITY 1 EA

REF DES	PART DESCRIPTION	AUSTRON PART	MFG PART	FIC
R19	4.7 K 1/8W 10 RES FXD COMP	651110-0472	RC05GF472K	81349
R20	4.7 K 1/8W 10 RES FXD COMP	651110-0472	RC05GF472K	81349
R21	4.7 K 1/8W 10 RES FXD COMP	651110-0472	RC05GF472K	81349
U11	IC QUADR 2-INP NAND GATE	703SN54LS00J	SN54LS00J	01295
U12	IC QUADR 2 TO 1 LINE DATA SEL/MUX	703SN54LS157	SN54LS157J	01295
U13	IC QUADR 2-INP NAND GATE	703SN54LS00J	SN54LS00J	01295
U21	IC QUADR 2-INP NAND GATE	703SN54LS00J	SN54LS00J	01295
U22	IC DUAL D-TYPE FLIP-FLOP	703SN54LS74J	SN54LS74J	01295
U23	I.C.	703SN54L123		

MANUAL PARTS LIST MODEL 1210D 24 UCT 84

ASSEMBLY PLATE ASSY (A6)
ASSEMBLY NUMBER 11096211
REFERENCE DESIGNATOR PREFIX 1A6
QUANTITY 1 EA

REF DES	PART DESCRIPTION	AUSTRON PART	MFG PART	FIC
C1	2600 UF 50V 10 CAP ELECTROLYTIC	602036-0268	36D262G050AB2A	56289
CR1	500VR 12A DIO S REC DO-4	701MR1125	MR1125	04713
CR2	500VR 12A DIO S REC DO-4	701MR1125	MR1125	04713
CR3	DIODE HOT CARRIER	7011N5829	1N5829	04713
J1	CONNECTOR 5 PIN W/ LOCK CLIP	551300-0007	126-216	13511
Q1	TRANSISTOR	702MJE3055	MJE3055	04713
R1	20 OHM 10 W 3 RES FXD W.W.	652011-0200	RE65G20R0	81349
R2	200 OHM 10 W 3 RES FXD W.W.	652011-0201	RE65G2000	81349
T1	TRANSFORMER ASSY, POWER	12097247		24672
XT1	SOCKET, 8 OCTAL SOLDER TYPE	551024-0013	77-M1P-8	74868

ASSEMBLY PC BOARD ASSY-BRIDGE
ASSEMBLY NUMBER 10394664
REFERENCE DESIGNATOR PREFIX 1A7
QUANTITY 1 EA

REF DES	PART DESCRIPTION	AUSTRON PART	MFG PART	FIC
CR1	100VR 5A DIO S RECT	701A15A	A15A	03508
CR2	100VR 5A DIO S RECT	701A15A	A15A	03508
CR3	100VR 5A DIO S RECT	701A15A	A15A	03508
CR4	100VR 5A DIO S RECT	701A15A	A15A	03508

MANUAL PARTS LIST MODEL 1210D 24 OCT 84

ASSEMBLY BATTERY PACK ASSY
ASSEMBLY NUMBER 12096212
REFERENCE DESIGNATOR PREFIX 1A8
QUANTITY 1 EA

REF DES	PART DESCRIPTION	AUSTRON PART	MFG PART	FIC
BT1	BATTERY, NICAD 1.25V 7.5AMP.HR.	570900-0015	7.0SCL	31741
BT2	BATTERY, NICAD 1.25V 7.5AMP.HR.	570900-0015	7.0SCL	31741
BT3	BATTERY, NICAD 1.25V 7.5AMP.HR.	570900-0015	7.0SCL	31741
BT4	BATTERY, NICAD 1.25V 7.5AMP.HR.	570900-0015	7.0SCL	31741
BT5	BATTERY, NICAD 1.25V 7.5AMP.HR.	570900-0015	7.0SCL	31741
BT6	BATTERY, NICAD 1.25V 7.5AMP.HR.	570900-0015	7.0SCL	31741
BT7	BATTERY, NICAD 1.25V 7.5AMP.HR.	570900-0015	7.0SCL	31741
BT8	BATTERY, NICAD 1.25V 7.5AMP.HR.	570900-0015	7.0SCL	31741
BT9	BATTERY, NICAD 1.25V 7.5AMP.HR.	570900-0015	7.0SCL	31741
BT10	BATTERY, NICAD 1.25V 7.5AMP.HR.	570900-0015	7.0SCL	31741
BT11	BATTERY, NICAD 1.25V 7.5AMP.HR.	570900-0015	7.0SCL	31741
BT12	BATTERY, NICAD 1.25V 7.5AMP.HR.	570900-0015	7.0SCL	31741
MP1	COVER BATTERY, BOTTOM	00796732		24672
MP2	COVER BATTERY, TOP	00796733		24672
MP3	SPACER BATTERY BOX	01596217		24672
MP4	SPACER BATTERY BOX	01596217		24672
MP5	INSULATOR, BATTERY, WIDE	02096215		24672
MP6	INSULATOR, BATTERY, WIDE	02096215		24672
MP7	INSULATOR, BATTERY, NARROW	02096216		24672
MP8	INSULATOR, BATTERY, NARROW	02096216		24672
MP9	INSULATOR, BATTERY, NARROW	02096216		24672
MP10	INSULATOR, BATTERY, NARROW	02096216		24672
P1	CONN, 5 PIN	551300-0013	126-223	74868

ASSEMBLY XTLOSC, 1150 (70-85 DEG)
ASSEMBLY NUMBER 30296818
REFERENCE DESIGNATOR PREFIX 1A9
QUANTITY 1 EA

REF DES	PART DESCRIPTION	AUSTRON PART	MFG PART	FIC
	THIS OSCILLATOR IS A SEALED UNIT RETURN TO FACTORY FOR REPAIR			

MANUAL PARTS LIST MODEL 1210D 24 OCT 84

ASSEMBLY PANEL ASSY, REAR
ASSEMBLY NUMBER 10996195
REFERENCE DESIGNATOR PREFIX 1A10
QUANTITY 1 EA

REF DES	PART DESCRIPTION	AUSTRON PART	MFG PART	FIC
F1	FUSE 3AG 1 AMP 250V SLO BLO	552002-0010	313001	75915
F2	FUSE 3AG 1 AMP 250V SLO BLO	552002-0010	313001	75915
F3	FUSE 3AG 2.5 AMP 125V SLO BLO	552001-0026	31302.5	75915
J1	CONN, BOX MOUNT 3-PIN CONTACT	551102-0016	MS3102A-14S-1P	96906
J2	CONNECTOR BNC	551100-7935	KC79-35	11636
S1	SW, TOGGLE SPDT (C&K #7101)	553010-0015	U11SYZQ	95146
W1	CORD POWER BELDEN 17239-S	570075-0002	17239B	70903
XF1	HOLDER,FUSE	507003-2012	342012	75915
XF2	HOLDER,FUSE	507003-2012	342012	75915
XF3	HOLDER,FUSE	507003-2012	342012	75915

ASSEMBLY PCB ASSY, DC FILTER
ASSEMBLY NUMBER 10396200
REFERENCE DESIGNATOR PREFIX 1A11
QUANTITY 1 EA

REF DES	PART DESCRIPTION	AUSTRON PART	MFG PART	FIC
C1	4.7 UF 35V 10 CAP TANT	608017-0475	CS13BF475K	81349
C2	4.7 UF 35V 10 CAP TANT	608017-0475	CS13BF475K	81349
L1	WIDEBAND CHOKE	751102-0000	VK20010/3B	02114
L2	WIDEBAND CHOKE	751102-0000	VK20010/3B	02114

MANUAL PARTS LIST MODEL 1210D 24 OCT 84

ASSEMBLY PCB ASSY, INTERCONNECT
ASSEMBLY NUMBER 10396769
REFERENCE DESIGNATOR PREFIX 1A12
QUANTITY 1 EA

REF DES	PART DESCRIPTION	AUSTRON PART	MFG PART	FIC
C1	.1UF 200V 10 CAP MYLAR	604192-0027	192P10492	56289
C2	CAP CERA AXL X7R .01 UF 100V 10%	601205-0103	CK12BX103K	81349
CR1	75 PRV DIO S SIG	7011N914	1N914	81349
Q1	0.31W TO-92 XSTR NPNS SH	7022N3904	2N3904	81349
Q2	0.31W TO-92 XSTR NPNS SH	7022N3904	2N3904	81349
R1	RES FXD COMP 470 OHM 1/4W 10%	651102-0471	RC07GF471K	81349
R2	RES FXD COMP 4.7 K 1/4W 10%	651102-0472	RC07GF472K	81349
R3	RES FXD COMP 4.7 K 1/4W 10%	651102-0472	RC07GF472K	81349
R4	RES FXD COMP 4.7 K 1/4W 10%	651102-0472	RC07GF472K	81349
R5	RES FXD COMP 47 OHM 1/4W 10%	651102-0470	RC07GF470K	81349
R6	301 K 1/8W 1 RES FXD FILM	653001-3013	CT4301K1%	24546
R7	RES FXD COMP 10 OHM 1/4W 10%	651102-0100	RC07GF100K	81349
R8	RES FXD COMP 10 OHM 1/4W 10%	651102-0100	RC07GF100K	81349
R9	RES FXD COMP 10 OHM 1/4W 10%	651102-0100	RC07GF100K	81349
R10	RES FXD COMP 10 OHM 1/4W 10%	651102-0100	RC07GF100K	81349
R11	RES FXD COMP 56 OHM 1/4W 10%	651102-0560	RC07GF560K	81349
XA13	CONN 22PIN DUAL READOUT PC TAB	551009-0008	00-6007-044-451-0018	11769
XA14	CONN 22PIN DUAL READOUT PC TAB	551009-0008	00-6007-044-451-0018	11769
XA15	CONN 22PIN DUAL READOUT PC TAB	551009-0008	00-6007-044-451-0018	11769
XA16	CONN 22PIN DUAL READOUT PC TAB	551009-0008	00-6007-044-451-0018	11769
XA17	CONN 22PIN DUAL READOUT PC TAB	551009-0008	00-6007-044-451-0018	11769
XA18	CONN 22PIN DUAL READOUT PC TAB	551009-0008	00-6007-044-451-0018	11769
XA19	CONN 22PIN DUAL READOUT PC TAB	551009-0008	00-6007-044-451-0018	11769
XA20	CONN 22PIN DUAL READOUT PC TAB	551009-0008	00-6007-044-451-0018	11769
XA21	CONN 22PIN DUAL READOUT PC TAB	551009-0008	00-6007-044-451-0018	11769

ASSEMBLY PC BOARD ASSY-PULSE AMPLIFIER
ASSEMBLY NUMBER 10394595
REFERENCE DESIGNATOR PREFIX 1A13
QUANTITY 1 EA

REF DES	PART DESCRIPTION	AUSTRON PART	MFG PART	FIC
C1	330 UF 6V 10 CAP TANT	608013-0337	CS13BB337K	81349
C2	.01 UF 100V 20 CAP CERAMIC	601004-0103	TG-S10	56289
C3	.01 UF 100V 20 CAP CERAMIC	601004-0103	TG-S10	56289
C4	.01 UF 100V 20 CAP CERAMIC	601004-0103	TG-S10	56289
C5	.01 UF 100V 20 CAP CERAMIC	601004-0103	TG-S10	56289
C6	1000 PF 100V 5 CAP DIP MICA	603000-0102	CM05FA102J03	81349
C7	470 PF 500V 5 CAP DIP MICA	603000-0471	CM05FD471J03	81349
C8	470 PF 500V 5 CAP DIP MICA	603000-0471	CM05FD471J03	81349
C9	.01 UF 100V 20 CAP CERAMIC	601004-0103	TG-S10	56289
C10	22 UF 35V 10 CAP TANT	608017-0226	CS13BF226K	81349
C11	1000 PF 100V 5 CAP DIP MICA	603000-0102	CM05FA102J03	81349
C12	470 PF 500V 5 CAP DIP MICA	603000-0471	CM05FD471J03	81349
C13	470 PF 500V 5 CAP DIP MICA	603000-0471	CM05FD471J03	81349
C14	.01 UF 100V 20 CAP CERAMIC	601004-0103	TG-S10	56289
C15	22 UF 35V 10 CAP TANT	608017-0226	CS13BF226K	81349
C16	1000 PF 100V 5 CAP DIP MICA	603000-0102	CM05FA102J03	81349
C17	470 PF 500V 5 CAP DIP MICA	603000-0471	CM05FD471J03	81349
C18	470 PF 500V 5 CAP DIP MICA	603000-0471	CM05FD471J03	81349
C19	.01 UF 100V 20 CAP CERAMIC	601004-0103	TG-S10	56289
C20	22 UF 35V 10 CAP TANT	608017-0226	CS13BF226K	81349
C21	1000 PF 100V 5 CAP DIP MICA	603000-0102	CM05FA102J03	81349
C22	470 PF 500V 5 CAP DIP MICA	603000-0471	CM05FD471J03	81349
C23	470 PF 500V 5 CAP DIP MICA	603000-0471	CM05FD471J03	81349
C24	.01 UF 100V 20 CAP CERAMIC	601004-0103	TG-S10	56289
C25	22 UF 35V 10 CAP TANT	608017-0226	CS13BF226K	81349
CR1	75 PRV DIO S SIG	7011N914	1N914	81349
CR2	6.8 V 500MW 10 DIO S ZEN DO-7	7011N5235A	1N5235A	08288
CR3	75 PRV DIO S SIG	7011N914	1N914	81349
CR4	6.8 V 500MW 10 DIO S ZEN DO-7	7011N5235A	1N5235A	08288
CR5	75 PRV DIO S SIG	7011N914	1N914	81349
CR6	6.8 V 500MW 10 DIO S ZEN DO-7	7011N5235A	1N5235A	08288
CR7	75 PRV DIO S SIG	7011N914	1N914	81349
CR8	6.8 V 500MW 10 DIO S ZEN DO-7	7011N5235A	1N5235A	08288

ASSEMBLY PC BOARD ASSY-PULSE AMPLIFIER (CONT)
ASSEMBLY NUMBER 10394595
REFERENCE DESIGNATOR PREFIX 1A13
QUANTITY 1 EA

REF DES	PART DESCRIPTION					AUSTRON PART	MFG PART	FIC
L1	WIDEBAND	CHOKE				751102-0000	VK20010/3B	02114
Q1	0.31W TO-92	XSTR	NPNS	SH		7022N3904	2N3904	81349
Q2	0.31W TO-92	XSTR	NPNS	SH		7022N3904	2N3904	81349
Q3	0.31W TO-92	XSTR	NPNS	SH		7022N3904	2N3904	81349
Q4	0.31W TO-92	XSTR	NPNS	SH		7022N3904	2N3904	81349
Q5	0.31W TO-92	XSTR	NPNS	SH		7022N3904	2N3904	81349
Q6	0.31W TO-92	XSTR	NPNS	SH		7022N3904	2N3904	81349
Q7	0.31W TO-92	XSTR	NPNS	SH		7022N3904	2N3904	81349
Q8	0.31W TO-92	XSTR	NPNS	SH		7022N3904	2N3904	81349
Q9	0.31W TO-92	XSTR	NPNS	SH		7022N3904	2N3904	81349
Q10	0.31W TO-92	XSTR	NPNS	SH		7022N3904	2N3904	81349
Q11	0.31W TO-92	XSTR	NPNS	SH		7022N3904	2N3904	81349
Q12	0.31W TO-92	XSTR	NPNS	SH		7022N3904	2N3904	81349
R1	RES FXD COMP	4.7	K	1/4W	10%	651102-0472	RC07GF472K	81349
R2	RES FXD COMP	22	K	1/4W	10%	651102-0223	RC07GF223K	81349
R3	RES FXD COMP	1	K	1/4W	10%	651102-0102	RC07GF102K	81349
R4	RES FXD COMP	6.8	K	1/4W	10%	651102-0682	RC07GF682K	81349
R5	RES FXD COMP	1.5	K	1/4W	10%	651102-0152	RC07GF152K	81349
R6	RES FXD COMP	1	K	1/4W	10%	651102-0102	RC07GF102K	81349
R7	RES FXD COMP	22	K	1/4W	10%	651102-0223	RC07GF223K	81349
R8	RES FXD COMP	3.3	K	1/4W	10%	651102-0332	RC07GF332K	81349
R9	RES FXD COMP	4.7	K	1/4W	10%	651102-0472	RC07GF472K	81349
R10	RES FXD COMP	22	K	1/4W	10%	651102-0223	RC07GF223K	81349
R11	RES FXD COMP	1	K	1/4W	10%	651102-0102	RC07GF102K	81349
R12	RES FXD COMP	6.8	K	1/4W	10%	651102-0682	RC07GF682K	81349
R13	RES FXD COMP	1.5	K	1/4W	10%	651102-0152	RC07GF152K	81349
R14	RES FXD COMP	1	K	1/4W	10%	651102-0102	RC07GF102K	81349
R15	RES FXD COMP	22	K	1/4W	10%	651102-0223	RC07GF223K	81349
R16	RES FXD COMP	3.3	K	1/4W	10%	651102-0332	RC07GF332K	81349
R17	RES FXD COMP	4.7	K	1/4W	10%	651102-0472	RC07GF472K	81349
R18	RES FXD COMP	22	K	1/4W	10%	651102-0223	RC07GF223K	81349
R19	RES FXD COMP	1	K	1/4W	10%	651102-0102	RC07GF102K	81349
R20	RES FXD COMP	6.8	K	1/4W	10%	651102-0682	RC07GF682K	81349

ASSEMBLY PC BOARD ASSY-PULSE AMPLIFIER (CONT)
ASSEMBLY NUMBER 10394595
REFERENCE DESIGNATOR PREFIX 1A13
QUANTITY 1 EA

REF DES	PART DESCRIPTION	AUSTRON PART	MFG PART	FIC
R21	RES FXD COMP 1.5 K 1/4W 10%	651102-0152	RC07GF152K	81349
R22	RES FXD COMP 1 K 1/4W 10%	651102-0102	RC07GF102K	81349
R23	RES FXD COMP 22 K 1/4W 10%	651102-0223	RC07GF223K	81349
R24	RES FXD COMP 3.3 K 1/4W 10%	651102-0332	RC07GF332K	81349
R25	RES FXD COMP 4.7 K 1/4W 10%	651102-0472	RC07GF472K	81349
R26	RES FXD COMP 22 K 1/4W 10%	651102-0223	RC07GF223K	81349
R27	RES FXD COMP 1 K 1/4W 10%	651102-0102	RC07GF102K	81349
R28	RES FXD COMP 6.8 K 1/4W 10%	651102-0682	RC07GF682K	81349
R29	RES FXD COMP 1.5 K 1/4W 10%	651102-0152	RC07GF152K	81349
R30	RES FXD COMP 1 K 1/4W 10%	651102-0102	RC07GF102K	81349
R31	RES FXD COMP 3.3 K 1/4W 10%	651102-0332	RC07GF332K	81349
R32	RES FXD COMP 22 K 1/4W 10%	651102-0223	RC07GF223K	81349
U1	IC MONOSTABLE MULTIVIBRATOR	703SN54121J	SN54121J	01295
U2	IC MONOSTABLE MULTIVIBRATOR	703SN54121J	SN54121J	01295
U3	IC MONOSTABLE MULTIVIBRATOR	703SN54121J	SN54121J	01295
U4	IC MONOSTABLE MULTIVIBRATOR	703SN54121J	SN54121J	01295

MANUAL PARTS LIST MODEL 1210D 24 OCT 84

ASSEMBLY PC BOARD ASSY, DIVIDER
ASSEMBLY NUMBER 10396614-1
REFERENCE DESIGNATOR PREFIX 1A14
QUANTITY 1 EA

REF DES	PART DESCRIPTION	AUSTRON PART	MFG PART	FIC
C1	330 UF 6V 10 CAP TANT	608013-0337	CS13BB337K	81349
C2	CAP CERA AXL X7R .01 UF 100V 10%	601205-0103	CK12BX103K	81349
C3	CAP CERA AXL X7R .01 UF 100V 10%	601205-0103	CK12BX103K	81349
C4	CAP CERA AXL X7R .01 UF 100V 10%	601205-0103	CK12BX103K	81349
C5	CAP CERA AXL X7R .01 UF 100V 10%	601205-0103	CK12BX103K	81349
L1	WIDEBAND CHOKE	751102-0000	VK20010/3B	02114
U1	IC DUAL DECADE COUNTER	703SN54LS390	SN54LS390J	01295
U2	IC DUAL DECADE COUNTER	703SN54LS390	SN54LS390J	01295
U3	IC DUAL DECADE COUNTER	703SN54LS390	SN54LS390J	01295
U4	IC DUAL DECADE COUNTER	703SN54LS390	SN54LS390J	01295
U5	IC DIVIDE BY TWELVE COUNTER	703SN54LS92J	SN54LS92J	01295

MANUAL PARTS LIST MODEL 1210D 24 OCT 84

ASSEMBLY PCB ASSY, TIME SYNC
ASSEMBLY NUMBER 10394618
REFERENCE DESIGNATOR PREFIX 1A15
QUANTITY 1 EA

REF DES	PART DESCRIPTION	AUSTRON PART	MFG PART	FIC
C1	330 UF 6V 10 CAP TANT	608013-0337	CS13BB337K	81349
C2	.01 UF 100V 20 CAP CERAMIC	601004-0103	TG-S10	56289
C3	.01 UF 100V 20 CAP CERAMIC	601004-0103	TG-S10	56289
C4	.01 UF 100V 20 CAP CERAMIC	601004-0103	TG-S10	56289
C5	.01 UF 100V 20 CAP CERAMIC	601004-0103	TG-S10	56289
C6	.01 UF 100V 20 CAP CERAMIC	601004-0103	TG-S10	56289
C7	.01 UF 100V 20 CAP CERAMIC	601004-0103	TG-S10	56289
C8	.01 UF 100V 20 CAP CERAMIC	601004-0103	TG-S10	56289
C9	.01 UF 100V 20 CAP CERAMIC	601004-0103	TG-S10	56289
CR1	75 PRV DIO S SIG	7011N914	1N914	81349
L1	WIDEBAND CHOKE	751102-0000	VK20010/3B	02114
Q1	0.31W TO-92 XSTR PNPS SH	7022N3906	2N3906	81349
Q2	0.31W TO-92 XSTR NPNS SH	7022N3904	2N3904	81349
Q3	0.31W TO-92 XSTR NPNS SH	7022N3904	2N3904	81349
R1	RES FXD COMP 4.7 K 1/4W 10%	651102-0472	RC07GF472K	81349
R2	RES FXD COMP 4.7 K 1/4W 10%	651102-0472	RC07GF472K	81349
R3	RES FXD COMP 4.7 K 1/4W 10%	651102-0472	RC07GF472K	81349
R4	RES FXD COMP 4.7 K 1/4W 10%	651102-0472	RC07GF472K	81349
R5	RES FXD COMP 1 K 1/4W 10%	651102-0102	RC07GF102K	81349
R6	RES FXD COMP 4.7 K 1/4W 10%	651102-0472	RC07GF472K	81349
R7	RES FXD COMP 10 K 1/4W 10%	651102-0103	RC07GF103K	81349
R8	RES FXD COMP 4.7 K 1/4W 10%	651102-0472	RC07GF472K	81349
R9	RES FXD COMP 4.7 K 1/4W 10%	651102-0472	RC07GF472K	81349
R10	RES FXD COMP 1 K 1/4W 10%	651102-0102	RC07GF102K	81349
R11	RES FXD COMP 1 K 1/4W 10%	651102-0102	RC07GF102K	81349
R12	RES FXD COMP 1 K 1/4W 10%	651102-0102	RC07GF102K	81349
R13	RES FXD COMP 1 K 1/4W 10%	651102-0102	RC07GF102K	81349
R14	RES FXD COMP 1 K 1/4W 10%	651102-0102	RC07GF102K	81349
R15	RES FXD COMP 4.7 K 1/4W 10%	651102-0472	RC07GF472K	81349
R16	RES FXD COMP 4.7 K 1/4W 10%	651102-0472	RC07GF472K	81349
R17	RES FXD COMP 4.7 K 1/4W 10%	651102-0472	RC07GF472K	81349
R18	RES FXD COMP 4.7 K 1/4W 10%	651102-0472	RC07GF472K	81349
R19	RES FXD COMP 4.7 K 1/4W 10%	651102-0472	RC07GF472K	81349

ASSEMBLY PCB ASSY, TIME SYNC (CONT)
ASSEMBLY NUMBER 10394618
REFERENCE DESIGNATOR PREFIX 1A15
QUANTITY 1 EA

REF DES	PART DESCRIPTION	AUSTRON PART	MFG PART	FIC
U1	IC DUAL J-K FLIP-FLOP W/CLEAR	703SN5473J	SN5473J	01295
U2	IC DUAL J-K FLIP-FLOP W/CLEAR	703SN5473J	SN5473J	01295
U3	IC QUADR 2-INP NAND GATE	703SN5400J	SN5400J	01295
U4	IC DUAL D-TYPE FLIP-FLOP	703SN5474J	SN5474J	01295
U5	IC QUADR 2-INP NAND GATE W/OCOLL OT	703SN5403J	SN5403J	01295

ASSEMBLY PC BOARD ASSY. +5 VDC REGULATOR
ASSEMBLY NUMBER 10394607
REFERENCE DESIGNATOR PREFIX 1A16
QUANTITY 1 EA

REF DES	PART DESCRIPTION	AUSTRON PART	MFG PART	FIC
C1	100 UF 20V 10 CAP TANT	608016-0107	CS13BE107K	81349
C2	.01 UF 100V 20 CAP CERAMIC	601004-0103	TG-S10	56289
C3	330 UF 6V 10 CAP TANT	608013-0337	CS13BB337K	81349
CR1	5.6 V 1 W 10 DIO S ZEN 59	7011N4734	1N4734	08288
CR2	75 PRV DIO S SIG	7011N914	1N914	81349
CR3	50 VR 3A DIO S RECT 60	701MR830	MR830	04713
L1	WIDEBAND CHOKE	751102-0000	VK20010/3B	02114
L2	TRANSFORMER	751310-2103	TM-2103	24765
Q1	0.31W TO-92 XSTR PNPS SH	7022N3906	2N3906	81349
Q2	0.31W TO-92 XSTR NPNS SH	7022N3904	2N3904	81349
Q3	0.31W TO-92 XSTR PNPS SH	7022N3906	2N3906	81349
Q4	40 W CASE 77-1 XSTR NPNS AP	7022N5192	2N5192	81349
R1	RES FXD COMP 2.2 K 1/4W 10%	651102-0222	RC07GF222K	81349
R2	SELECTED1/4W 10 RES FXD COMP	651102-SEL		
R3	RES FXD COMP 4.7 K 1/4W 10%	651102-0472	RC07GF472K	81349
R4	RES FXD COMP 15 K 1/4W 10%	651102-0153	RC07GF153K	81349
R5	RES FXD COMP 100 OHM 1/4W 10%	651102-0101	RC07GF101K	81349
R6	RES FXD COMP 1 K 1/2W 10%	651103-0102	RC20GF102K	81349
R7	RES FXD COMP 680 OHM 1/4W 10%	651102-0681	RC07GF681K	81349
R8	RES FXD COMP 10 OHM 1/4W 10%	651102-0100	RC07GF100K	81349
R9	RES FXD COMP 47 OHM 1/4W 10%	651102-0470	RC07GF470K	81349

MANUAL PARTS LIST MODEL 1210D 24 OCT 84

ASSEMBLY PCB ASSY, +15 VDC REGULATOR
ASSEMBLY NUMBER 10396197
REFERENCE DESIGNATOR PREFIX 1A17
QUANTITY 1 EA

REF DES	PART DESCRIPTION	AUSTRON PART	MFG PART	FIC
C1	100 UF 50V 10 CAP ELEC MIN	602039-0035	39D107G050EJ4	56289
C2	100 UF 50V 10 CAP ELEC MIN	602039-0035	39D107G050EJ4	56289
C3	100 UF 50V 10 CAP ELEC MIN	602039-0035	39D107G050EJ4	56289
L1	WIDEBAND CHOKE	751102-0000	VK20010/38	02114
Q1	TRANSISTOR DUAL	702MD8002	MD8002	04713
Q2	0.31W TO-92 XSTR PNPS SH	7022N3906	2N3906	81349
R1	RES FXD COMP 5.6 K 1/4W 10%	651102-0562	RC07GF562K	81349
R2	RES FXD COMP 12 K 1/4W 10%	651102-0123	RC07GF123K	81349
R3	RES FXD COMP 5.6 K 1/4W 10%	651102-0562	RC07GF562K	81349
R4	RES FXD COMP 560 OHM 1/4W 10%	651102-0561	RC07GF561K	81349
R5	RES FXD COMP 56 OHM 1/4W 10%	651102-0560	RC07GF560K	81349
R6	RES FXD COMP 1 K 1/4W 10%	651102-0102	RC07GF102K	81349
R7	RES FXD COMP 470 OHM 1/4W 10%	651102-0471	RC07GF471K	81349
R8	1 K 3/4W 10 RES VAR CERMET	659015-0102	89WR1K	73138
R9	RES FXD COMP 470 OHM 1/4W 10%	651102-0471	RC07GF471K	81349
VR1	5.1 V 1 W 10 DIO S ZEN 59	7011N4733	1N4733	08288

ASSEMBLY PCB ASSY, SINE CONVERTER
ASSEMBLY NUMBER 10396025-1
REFERENCE DESIGNATOR PREFIX 1A18
QUANTITY 1 EA

REF DES	PART DESCRIPTION	AUSTRON PART	MFG PART	FIC
C1	CAP CERA AXL X7R .01 UF 100V 10%	601205-0103	CK12BX103K	81349
C2	33 UF 10V 10 CAP TANT	608014-0336	CS13BC336K	81349
C3	CAP CERA AXL X7R .01 UF 100V 10%	601205-0103	CK12BX103K	81349
C4	CAP CERA AXL X7R .01 UF 100V 10%	601205-0103	CK12BX103K	81349
C5	NOT USED			
C6	470 PF 500V 5 CAP DIP MICA	603000-0471	CM05FD471J03	81349
C7	1 UF 35V 10 CAP TANT	608017-0105	CS13BF105K	81349
C8	3300 PF 500V 5 CAP DIP MICA	603000-0332	CM06FD332J03	81349
C9	1 UF 35V 10 CAP TANT	608017-0105	CS13BF105K	81349
L1	WIDEBAND CHOKE	751102-0000	VK20010/3B	02114
Q1	0.31W TO-92 XSTR NPNS SH	7022N3904	2N3904	81349
Q2	0.31W TO-92 XSTR NPNS SH	7022N3904	2N3904	81349
Q3	0.31W TO-92 XSTR NPNS SH	7022N3904	2N3904	81349
R1	NOT USED			
R2	RES FXD COMP 10 K 1/4W 10%	651102-0103	RC07GF103K	81349
R3	RES FXD COMP 4.7 K 1/4W 10%	651102-0472	RC07GF472K	81349
R4	RES FXD COMP 10 K 1/4W 10%	651102-0103	RC07GF103K	81349
R5	RES FXD COMP 2.2 K 1/4W 10%	651102-0222	RC07GF222K	81349
R6	NOT USED			
R7	NOT USED			
R8	NOT USED			
R9	RES FXD COMP 470 OHM 1/4W 10%	651102-0471	RC07GF471K	81349
R10	RES FXD COMP 47 OHM 1/4W 10%	651102-0470	RC07GF470K	81349
R11	RES FXD COMP 100 OHM 1/4W 10%	651102-0101	RC07GF101K	81349
R12	RES FXD COMP 100 OHM 1/4W 10%	651102-0101	RC07GF101K	81349
R13	RES FXD COMP 47 OHM 1/4W 10%	651102-0470	RC07GF470K	81349
R14	47 OHM 1/8W 10 RES FXD COMP	651110-0470	RC05GF470K	81349
T1	XFORMER, 1MHZ OUTPUT	75195770		24672
U1	IC QUADR 2-INP NAND GATE	703SN54LS00J	SN54LS00J	01295
U2	IC DECADE COUNTER	703SN54LS90J	SN54LS90J	01295
U4	IC FXD OUTPUT VOL REG POSITIVE 5V	703MC78M05CG	MC78M05CG	04713

MANUAL PARTS LIST MODEL 1210D 24 OCT 84

ASSEMBLY PCB ASSY OUTPUT AMPLIFIER
ASSEMBLY NUMBER 10396031-1
REFERENCE DESIGNATOR PREFIX 1A19
QUANTITY 1 EA

REF DES	PART DESCRIPTION	AUSTRON PART	MFG PART	FIC
C1	NOT USED			
C2	470 PF 500V 5 CAP DIP MICA	603000-0471	CM05FD471J03	81349
C3	1 UF 35V 10 CAP TANT	608017-0105	CS13BF105K	81349
C4	470 PF 500V 5 CAP DIP MICA	603000-0471	CM05FD471J03	81349
C5	NOT USED			
C6	470 PF 500V 5 CAP DIP MICA	603000-0471	CM05FD471J03	81349
C7	1 UF 35V 10 CAP TANT	608017-0105	CS13BF105K	81349
C8	3300 PF 500V 5 CAP DIP MICA	603000-0332	CM06FD332J03	81349
C9	NOT USED			
C10	470 PF 500V 5 CAP DIP MICA	603000-0471	CM05FD471J03	81349
C11	1 UF 35V 10 CAP TANT	608017-0105	CS13BF105K	81349
C12	3300 PF 500V 5 CAP DIP MICA	603000-0332	CM06FD332J03	81349
L1	470 UH CHOKE	751104-0471	MS90537-45	96906
L2	2200 UH CHOKE	751104-0222	MS90537-53	96906
L3	2200 UH CHOKE	751104-0222	MS90537-53	96906
Q1	0.31W TO-92 XSTR NPNS SH	7022N3904	2N3904	81349
Q2	0.31W TO-92 XSTR PNPS SH	7022N3906	2N3906	81349
Q3	0.31W TO-92 XSTR NPNS SH	7022N3904	2N3904	81349
Q4	0.31W TO-92 XSTR PNPS SH	7022N3906	2N3906	81349
Q5	0.31W TO-92 XSTR NPNS SH	7022N3904	2N3904	81349
Q6	0.31W TO-92 XSTR PNPS SH	7022N3906	2N3906	81349
R1	RES FXD COMP 47 OHM 1/4W 10%	651102-0470	RC07GF470K	81349
R2	RES FXD COMP 470 OHM 1/4W 10%	651102-0471	RC07GF471K	81349
R3	RES FXD COMP 15 K 1/4W 10%	651102-0153	RC07GF153K	81349
R4	RES FXD COMP 1.5 K 1/4W 10%	651102-0152	RC07GF152K	81349
R5	RES FXD COMP 1 K 1/4W 10%	651102-0102	RC07GF102K	81349
R6	RES FXD COMP 220 OHM 1/4W 10%	651102-0221	RC07GF221K	81349
R7	SELECTED1/4W 10 RES FXD COMP	651102-SEL		
R8	RES FXD COMP 47 OHM 1/4W 10%	651102-0470	RC07GF470K	81349
R9	RES FXD COMP 68 OHM 1/4W 10%	651102-0680	RC07GF680K	81349
R10	RES FXD COMP 47 OHM 1/4W 10%	651102-0470	RC07GF470K	81349
R11	RES FXD COMP 470 OHM 1/4W 10%	651102-0471	RC07GF471K	81349
R12	RES FXD COMP 15 K 1/4W 10%	651102-0153	RC07GF153K	81349

ASSEMBLY PCB ASSY OUTPUT AMPLIFIER (CONT)
ASSEMBLY NUMBER 10396031-1
REFERENCE DESIGNATOR PREFIX 1A19
QUANTITY 1 EA

REF DES	PART DESCRIPTION	AUSTRON PART	MFG PART	FIC
R13	RES FXD COMP 1.5 K 1/4W 10%	651102-0152	RC07GF152K	81349
R14	RES FXD COMP 1 K 1/4W 10%	651102-0102	RC07GF102K	81349
R15	RES FXD COMP 220 OHM 1/4W 10%	651102-0221	RC07GF221K	81349
R16	SELECTED1/4W 10 RES FXD COMP	651102-SEL		
R17	RES FXD COMP 68 OHM 1/4W 10%	651102-0680	RC07GF680K	81349
R18	RES FXD COMP 47 OHM 1/4W 10%	651102-0470	RC07GF470K	81349
R19	NOT USED			
R20	RES FXD COMP 470 OHM 1/4W 10%	651102-0471	RC07GF471K	81349
R21	RES FXD COMP 15 K 1/4W 10%	651102-0153	RC07GF153K	81349
R22	RES FXD COMP 1.5 K 1/4W 10%	651102-0152	RC07GF152K	81349
R23	RES FXD COMP 1 K 1/4W 10%	651102-0102	RC07GF102K	81349
R24	RES FXD COMP 220 OHM 1/4W 10%	651102-0221	RC07GF221K	81349
R25	SELECTED1/4W 10 RES FXD COMP	651102-SEL		
R26	RES FXD COMP 68 OHM 1/4W 10%	651102-0680	RC07GF680K	81349
R27	RES FXD COMP 150 OHM 1/4W 10%	651102-0151	RC07GF151K	81349
R28	RES FXD COMP 150 OHM 1/4W 10%	651102-0151	RC07GF151K	81349
T1	XFORMER, 5MHZ OUTPUT	75195768		24672
T2	XFORMER, 1MHZ OUTPUT	75195770		24672
T3	XFORMER, 1MHZ OUTPUT	75195770		24672
Y1	XTAL, 5.000000 MHZ FILTER	752B5000000	4051122-C	74306
Y2	XTAL, 1.000000 MHZ FILTER	752A1000000	4051122	74306
Y3	XTAL, 1.000000 MHZ FILTER	752A1000000	4051122	74306

7.0 OPTIONAL ASSEMBLIES

7.1 SCOPE OF SECTION

7.1.1 This section lists the special options available and describes the changes to the AUSTRON Model 1210D Portable Crystal Clock for each of these options.

7.2 LIST OF OPTIONAL ASSEMBLIES

7.2.1 The following is a list of the different options available, and a description of each:

Model Number	Description
1210D-01	10 MHz, 5 MHz, 1 MHz and 100 kHz sinusoidal outputs; 1 PPS pulse output.
1210D-02	5 MHz, 1 MHz, and 60 Hz sinusoidal outputs; 1 PPS and 1 PP10S pulse outputs.
1210D-03	10 MHz, 5 MHz, and 1 MHz sinusoidal outputs; 100 PPS, 1 PPS and 1 PPM pulse outputs.

7.2.2 Figure 7-1 may be referenced to show the location of the outputs on the front panel. A chart is included to illustrate the descriptive differences between each unit. Notice also that the reference designators for the additional connectors are included in figure 7-1.

7.2.3 The following sections discuss the difference between each optional assembly and the previously discussed model 1210D assembly. Chassis circuit diagrams, circuit descriptions, schematics and parts list are included, where applicable, for the variations.

7.3 MODEL 1210D-01 PORTABLE CRYSTAL CLOCK

7.3.1 The model 1210D-01 Portable Crystal Clock has 10 MHz, 5 MHz, 1 MHz, and 100 kHz sinusoidal outputs as well as a 1 PPS output. These outputs retain the specifications detailed in section 1.3. This version is the same as the model 1210D with the addition of a 100 kHz Output Amplifier (A20). The Output Amplifier (A19) has been replaced with the 10 MHz, 5 MHz, 1 MHz Output Amplifier (AUSTRON Part Number 10397342). The Sine Converter (A18) has the optional 100 kHz section installed. The Final Filter (A3) has been replaced with one having four sections tuned to the appropriate frequencies.

REVISIONS				
ZONE	LTR	DESCRIPTION	DATE	APPD
	H	REVISED -2 SILKSCREEN PER ECO # 3179	11-14-79	RCB

NOTE: "J" NUMBERS SHOWN IN PARENTHESIS ARE FOR REFERENCE ONLY AND ARE NOT ON THE SILKSCREEN.

SILKSCREEN VARIATIONS									
DASH NO.	POSITION								ARTWORK REV STATUS
	A	B	C	D	E	F	G	H	
NONE	—	—	(J2) 5MHZ	(J3) 1MHZ	(J4) 1MHZ	(J5) 1PPS	—	1210D	C
-1	—	(J2) 10MHZ	(J3) 5MHZ	(J4) 1MHZ	(J5) 100KHZ	(J6) 1PPS	—	1210D-01	B
-2	—	(J2) 5MHZ	(J3) 1MHZ	(J4) 60HZ	(J5) 1PPS	(J6) 1PP10S	(J7) 60PPS	1210D-02	D
-3	(J2) 10MHZ	(J3) 5MHZ	(J4) 1MHZ	—	(J5) 100PPS	(J6) 1PPS	(J7) 1PPM	1210D-03	A

TOLERANCES UNLESS OTHERWISE SPECIFIED			
DECIMALS	FRACTIONS	ANGLES	
MATERIAL:			
ENGR	ISERT	9-5-75	
CHECK			
DRFTSMN	BARKER	8-14-75	

7-1

DES FIG NO

AUSTRON INC.
AUSTIN, TEXAS

PANEL - FRONT

SIZE	CODE IDENT NO	
3	24672	009 96192 ✱

SCALE 1:1 SHEET 2 OF 2

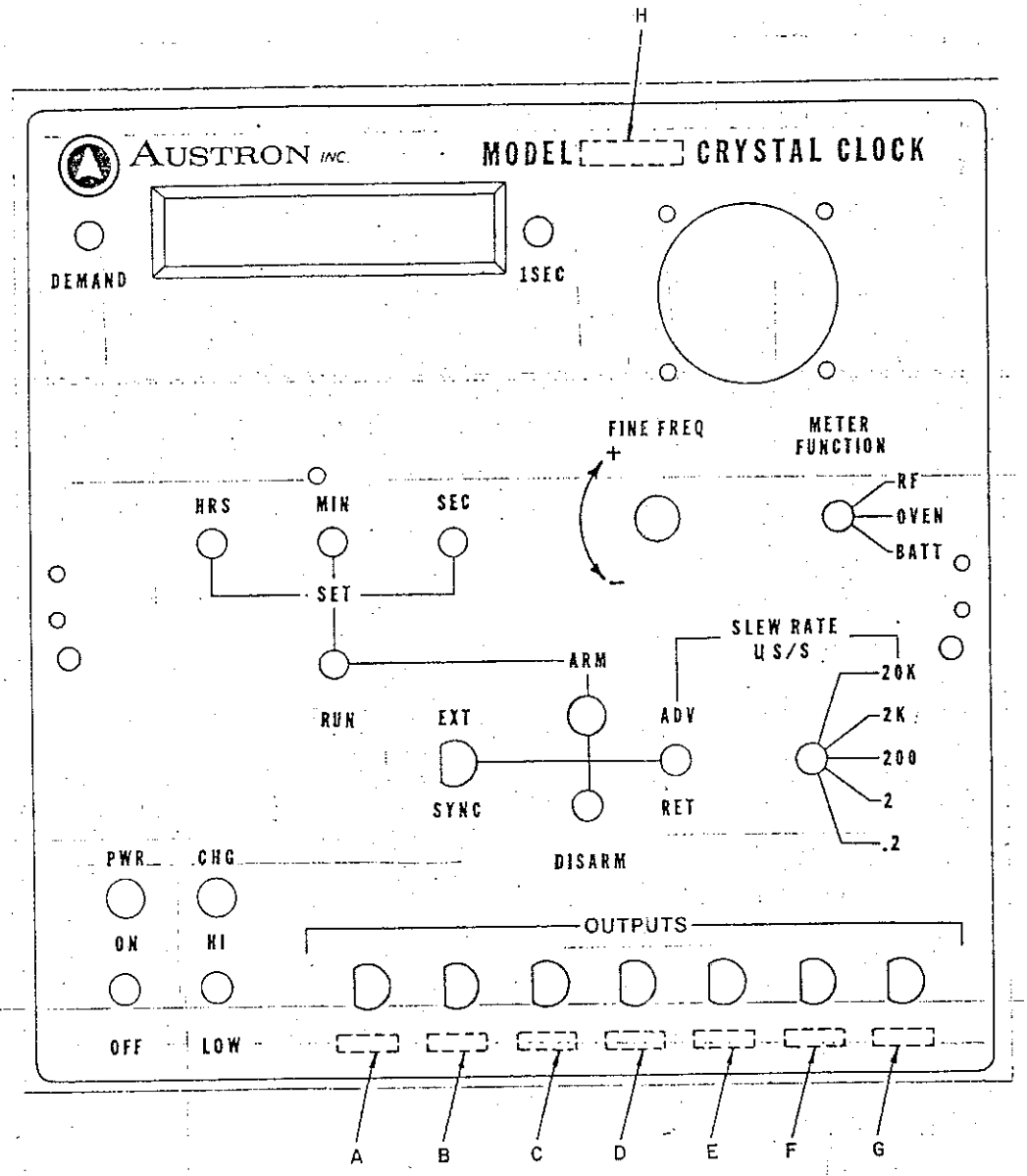

APPLY NOMENCLATURE TO THESE POSITIONS PER CHART ABO

109 96193 *	1210D	1A2
NEXT ASSY	USED ON	REF
APPLICATION		

REVISIONS				
ZONE	LTR	DESCRIPTION	DATE	APPD
	—	RELEASED	3-15-76	RDB
	A	REVISED PER ECO 2344 & 2366	4-20-78	RDB

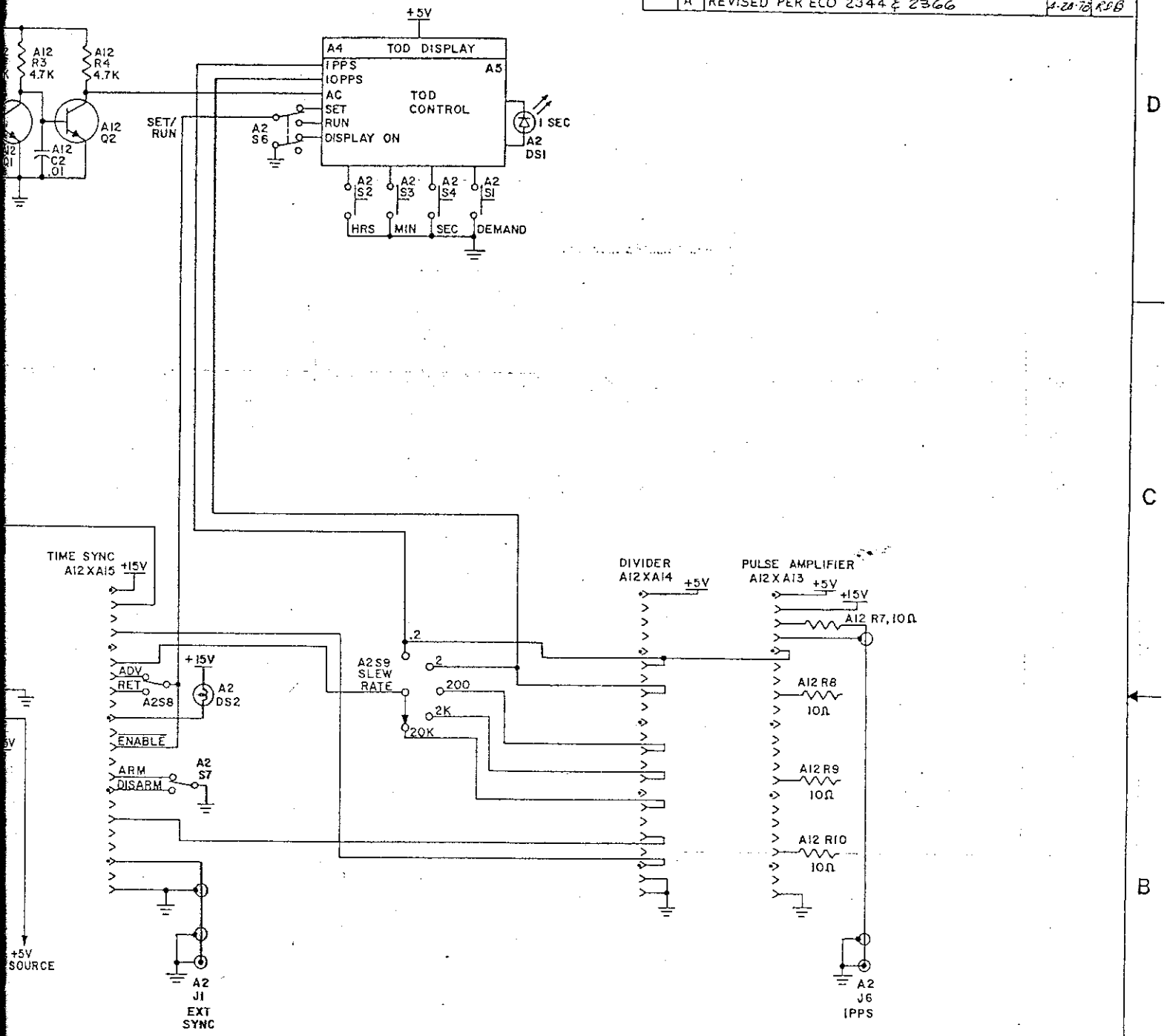

127 96207	1210D-01		7-2
NEXT ASSY	USED ON	REF DES	FIG NO
APPLICATION			

TOLERANCES UNLESS OTHERWISE SPECIFIED

DECIMALS	FRACTIONS	ANGLES

MATERIAL: N/A

ENGR	RDA	3/16/78
CHECK	R.E. Barker	3-15-76
DRFTSMN	LDP	2/23/78

AUSTRON INC. AUSTIN, TEXAS

SCHEMATIC DIAGRAM - 1210D-01 CRYSTAL CLOCK

SIZE	CODE IDENT NO		
4	24672	123 96570	A

SCALE N/A SHEET 1 OF 1

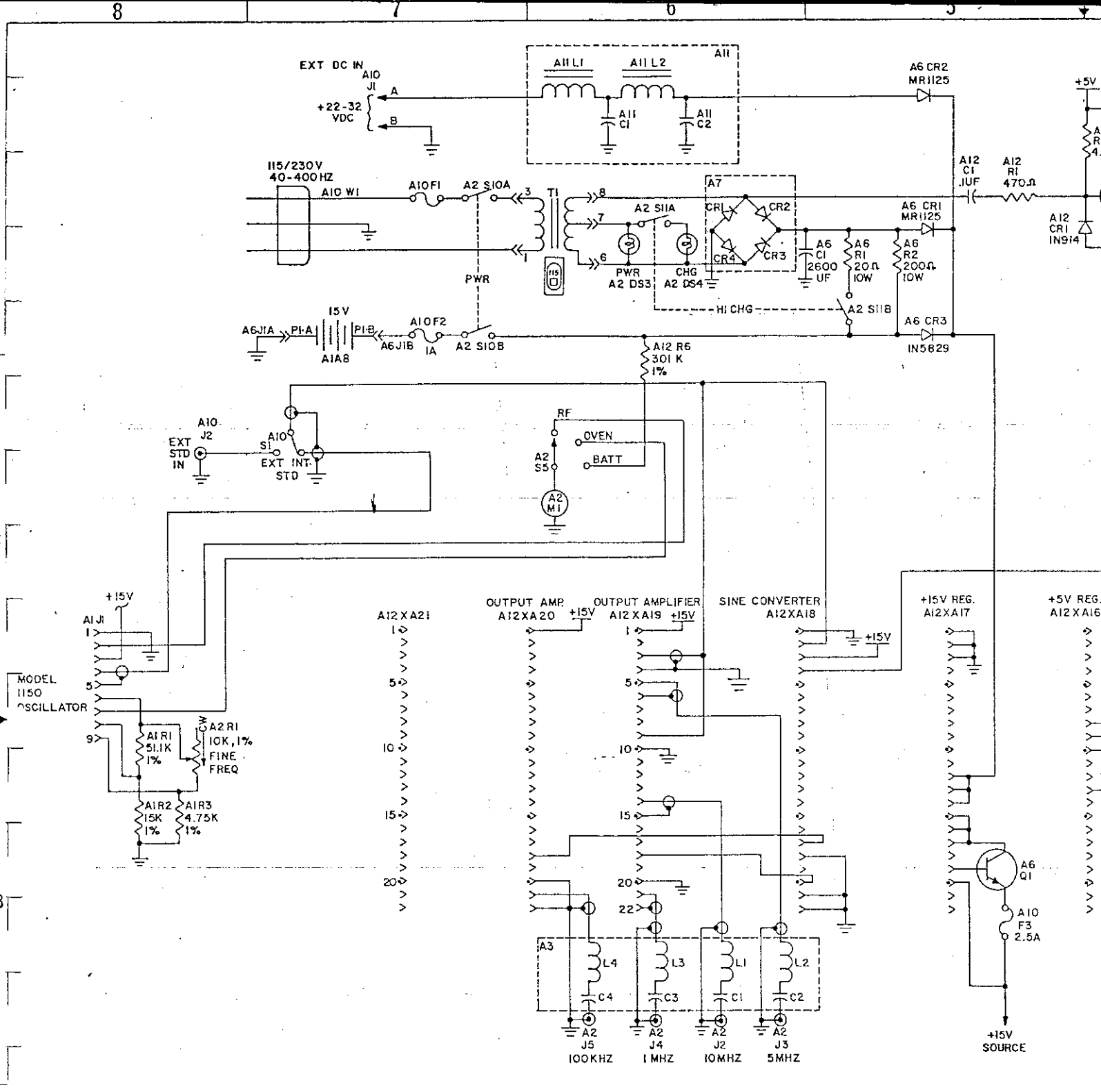

NOTES:

1. ALL RESISTORS 1/4W 10% UNLESS OTHERWISE SPECIFIED.
2. A12Q1 AND A12Q2 ARE 2N3904.
3. A6Q1 IS AN MJE3055.

REVISIONS				
ZONE	LTR	DESCRIPTION	DATE	APPD
	—	RELEASED	3-6-78	RGB

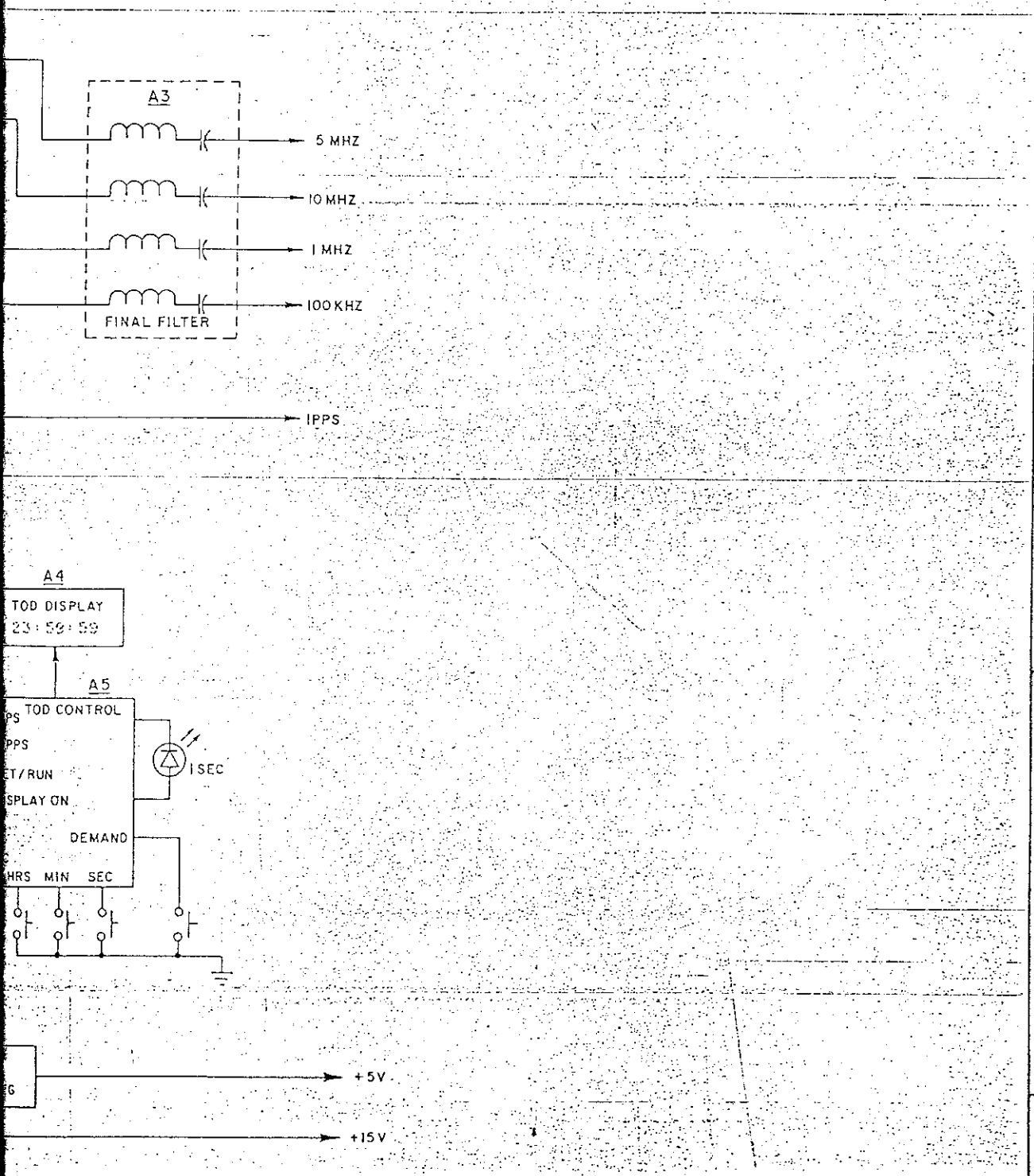

D-01		7-3
D ON	REF DES	FIG NO
LICATION		

TOLERANCES
UNLESS OTHERWISE SPECIFIED

DECIMALS	FRACTIONS	ANGLES

MATERIAL:

ENGR	L. Wolcott	2-23-78
CHECK	K. Backer	2-22-78
DRFTSMN	S. Schmidt	2-22-78

AUSTRON INC.
AUSTIN, TEXAS

BLOCK DIAGRAM
1210D-01 CRYSTAL CLOCK

SIZE	CODE IDENT NO	
3	24672	124 96555

SCALE NA | SHEET 1 OF 1

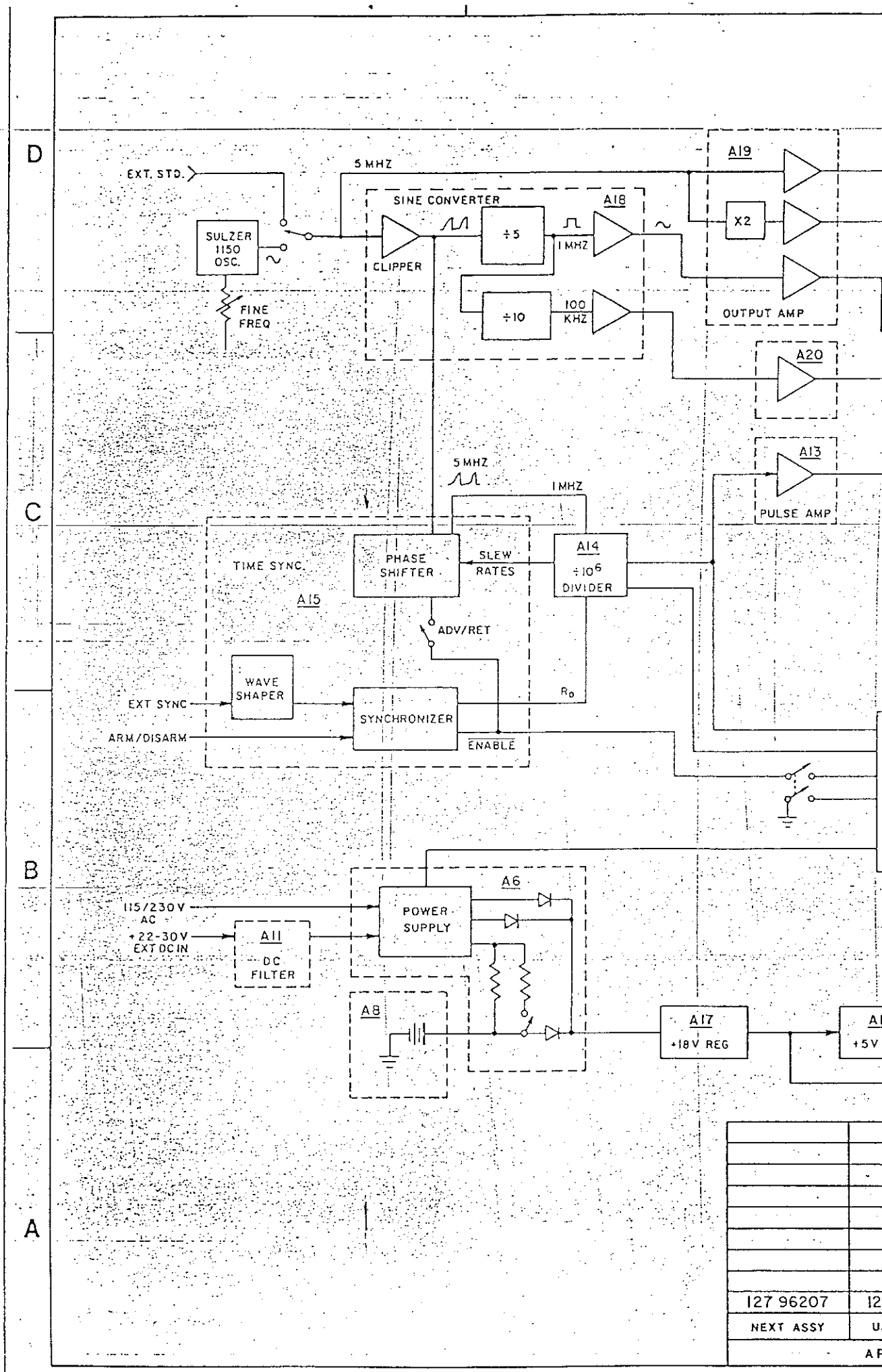
D
C
B
A
EXT. STD.
5 MHZ
SULZER 1150 OSC.
FINE FREQ
SINE CONVERTER
CLIPPER
÷5
A18
1 MHZ
÷10
100 KHZ
A19
X2
OUTPUT AMP
A20
A13
PULSE AMP
5 MHZ
1 MHZ
TIME SYNC.
A15
PHASE SHIFTER
SLEW RATES
A14
÷10⁶ DIVIDER
ADV/RET
WAVE SHAPER
EXT SYNC
SYNCHRONIZER
R₀
ARM/DISARM
ENABLE
115/230V AC
+22-30V EXT DC IN
A11
DC FILTER
POWER SUPPLY
A6
A8
A17
+18V REG
+5V
127 96207
NEXT ASSY

MANUAL PARTS LIST MODEL 1210D-01 24 OCT 84

ASSEMBLY CRYSTAL CLOCK, MODEL 1210D-01
ASSEMBLY NUMBER 32196206-1
REFERENCE DESIGNATOR PREFIX
QUANTITY 1 EA

REF DES	PART DESCRIPTION	AUSTRON PART	MFG PART	FIC
	PCB ASSY, EXTENDER	10393765		24672
	MANUAL	12796207		24672
	CLAMP, AN3057-6	551013-0006	AN3057-6	81352
	CONN, STRAIGHT 3 SOCKET CONTACT	551106-0017	MS3106A-14S-1S	96906
	TUNING WAND	901000-8605	8605	20018
1	FINAL ASSY, MODEL 1210D	27196208-1		24672

ASSEMBLY FINAL ASSY, MODEL 1210D
ASSEMBLY NUMBER 27196208-1
REFERENCE DESIGNATOR PREFIX 1
QUANTITY 1 EA

REF DES	PART DESCRIPTION	AUSTRON PART	MFG PART	FIC
A1	NOT USED			
A2	PANEL ASSY, FRONT	10996193-1		24672
A3	PCB ASSY, FINAL FILTER	10397355		24672
A4	PCB ASSY, TOD DISPLAY	10396186		24672
A5	PCB ASSY T.O.D. CONTROL	10396188		24672
A6	PLATE ASSY (46)	11096211		24672
A7	PC BOARD ASSY-BRIDGE	10394664		24672
A8	BATTERY PACK ASSY	12096212		24672
A9	XTLOSC, 1150 (70-85 DEG)	30296818		24672
A10	PANEL ASSY, REAR	10996195		24672
A11	PCB ASSY, DC FILTER	10396200		24672
A12	PCB ASSY, INTERCONNECT	10396769		24672
A13	PC BOARD ASSY-PULSE AMPLIFIER	10394595-1		24672
A14	PC BOARD ASSY, DIVIDER	10396614		24672
A15	PCB ASSY, TIME SYNC	10394618		24672
A16	PC BOARD ASSY, +5 VDC REGULATOR	10394607		24672
A17	PCB ASSY, +15 VDC REGULATOR	10396197		24672
A18	PCB ASSY SINE CONVERTER	10396025		24672
A19	PCB ASSY 10,5,1MHZ OUTPUT AMP	10397342		24672
A20	PC BOARD ASSY-100KHZ OUTPUT AMP	10397359		24672
MP1	COVER, FRONT	00794304		24672
MP2	COVER-INSTRUMENT	00796209-1		24672
MP3	COVER-INSTRUMENT	00796209-2		24672
MP4	BAR RECTANGULAR	01096753		24672
MP5	.171X1/4X1/2 SPACER ROUND	520830-0005	9228-SS171-0	06540
MP6	.171X1/4X1/2 SPACER ROUND	520830-0005	9228-SS171-0	06540
MP7	.171X1/4X1/2 SPACER ROUND	520830-0005	9228-SS171-0	06540
MP8	.171X1/4X1/2 SPACER ROUND	520830-0005	9228-SS171-0	06540
MP9	WASHER, PRELOAD	02096741		24672
MP10	WASHER, PRELOAD	02096741		24672
MP11	WASHER, PRELOAD	02096741		24672
MP12	WASHER, PRELOAD	02096741		24672
MP14	SHOCK MOUNT BUSHING	520205-0005	10R4-1501R	14519

ASSEMBLY FINAL ASSY, MODEL 1210D (CONT)
ASSEMBLY NUMBER 27196208-1
REFERENCE DESIGNATOR PREFIX 1
QUANTITY 1 EA

REF DES	PART DESCRIPTION	AUSTRON PART	MFG PART	FIC
MP15	SHOCK MOUNT BUSHING	520205-0005	10R4-15018	14519
MP16	SHOCK MOUNT BUSHING	520205-0005	10R4-15018	14519
MP17	SHOCK MOUNT BUSHING	520205-0005	10R4-15018	14519
MP18	SHOCK DRIVE WASHER	520205-0010	10R41500	14519
MP19	SHOCK DRIVE WASHER	520205-0010	10R41500	14519
MP20	SHOCK DRIVE WASHER	520205-0010	10R41500	14519
MP21	SHOCK DRIVE WASHER	520205-0010	10R41500	14519
MP22	BUMPER, RUBBER W/HARDWARE	520210-2198	2198	83330
MP23	BUMPER, RUBBER W/HARDWARE	520210-2198	2198	83330
MP24	BUMPER, RUBBER W/HARDWARE	520210-2198	2198	83330
MP25	BUMPER, RUBBER W/HARDWARE	520210-2198	2198	83330

APPLICATION		REVISIONS			
NEXT ASSY	USED ON	LTR	DESCRIPTION	DATE	APPROVED
10996193-1	1210D-01	—	RELEASED	11-19-76	RDB
10996193-3	1210D-03	A	C1 WAS 22PF; C4 WAS .01 UF, PER ECO 1866	12-14-77	RDB
		B	ADDED -1 PER ECO # 2328	4-26-78	RDB

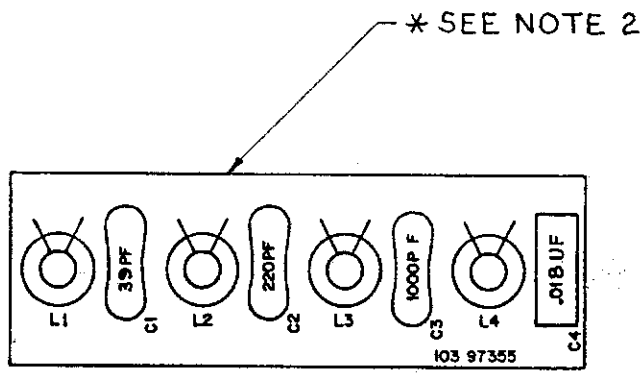

2. P/N 10397355 AS SHOWN, FOR P/N 10397355-1 OMIT L4 AND C4. (ADD "-1" TO P/N MARKING AS REQD.)

1. MOUNT CHOKES WITH NYLON ROD.

NOTES:

ENGINEER	[illegible]	11-30-76
CHECKED	[illegible]	11-30-76
DRAFTSMAN	BARKER	11-19-76

AUSTRON INC. AUSTIN, TEXAS

PC BOARD ASSY — FINAL FILTER

A3	7-4
REF DES	FIG NO

SIZE	CODE IDENT NO.		
1	24672	103 97355 *	B
SCALE 1:1		SHEET OF	

MANUAL PARTS LIST MODEL 12100-01 24 OCT 84

ASSEMBLY PCB ASSY, FINAL FILTER
ASSEMBLY NUMBER 10397355
REFERENCE DESIGNATOR PREFIX 1A3
QUANTITY 1 EA

REF DES	PART DESCRIPTION	AUSTRON PART	MFG PART	FIC
C1	39 PF 500V 5 CAP DIP MICA	603000-0390	DM15-390J	72136
C2	220 PF 500V 5 CAP DIP MICA	603000-0221	CM05FD221J03	09023
C3	1000 PF 100V 5 CAP DIP MICA	603000-0102	CM05FA102J03	81349
C4	.018 UF 50V 10 CAP FILM	607050-0183	71901AB183K500AX	01002
L1	10MHZ FILTER INDUCTOR	75197470		24672
L2	5MHZ FILTER INDUCTOR 4.6UH	75197469		24672
L3	1MHZ FILTER INDUCTOR 25UH	75197468		24672
L4	INDUCTOR,100KHZ FILTER	75197467		24672

7.3.2 100 kHz Output Amplifier -- The pcb (A20) has an output amplifier capable of supplying 1 V RMS into a 50 Ohm load.

7.3.2.1 The transistors Q1 and Q2 form a two-stage common-emitter, collector-tuned amplifier with negative feedback. The feedback ratio is determined by R5 and R6, which are used to set the output level. The output amplifier has been designed to allow a minimum level change for a maximum load change.

2 1

REVISIONS				
ZONE	LTR	DESCRIPTION	DATE	APPD
	—	RELEASED	11-18-76	RDB

D

C

E

A

TOLERANCES UNLESS OTHERWISE SPECIFIED			AUSTRON INC. AUSTIN, TEXAS
DEC	FRAC	ANG	
MATERIAL:			SCHEMATIC DIAGRAM - 100 KHZ OUTPUT AMPLIFIER
7-5 FIG NO			SIZE 2 / CODE IDENT NO 24672 / 123 97357
ENGR	RRH	11-30-76	
CHECK	RDB	11-30-76	
DRFTMN	BARKER	11-17-76	SCALE / SHEET OF

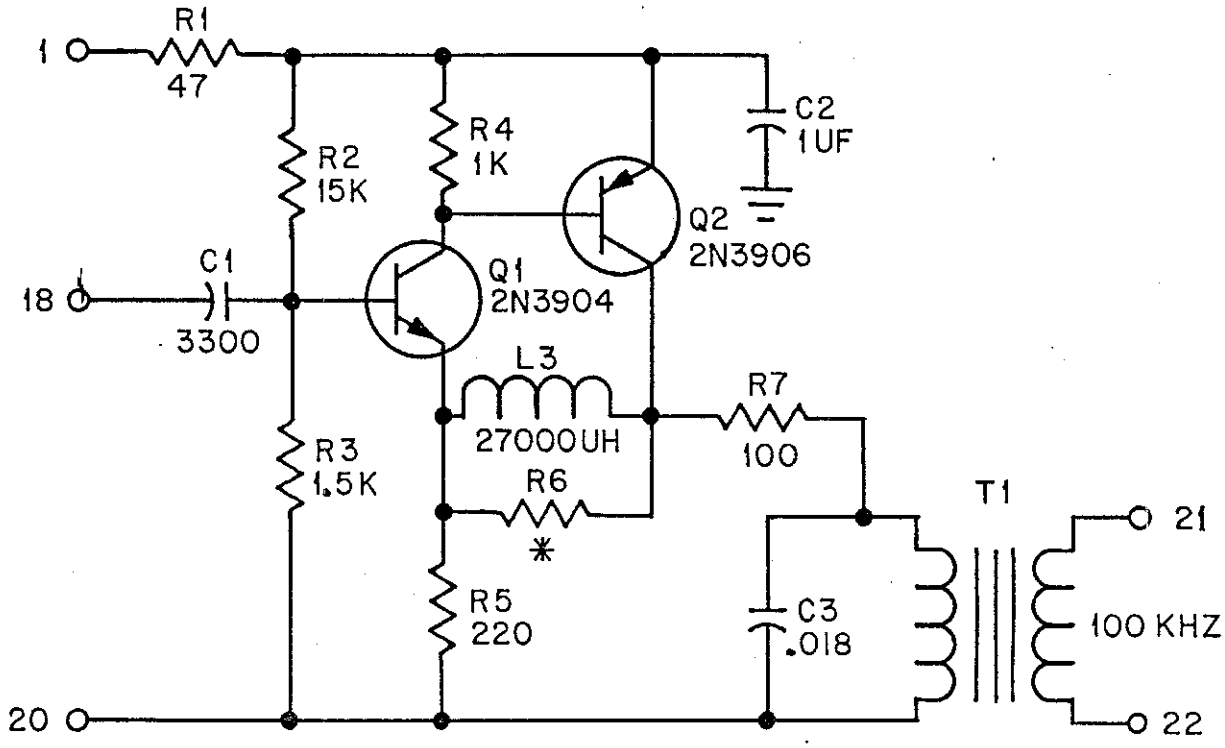

FOR OUTPUT LEVEL 1V RMS INTO 50 OHMS.

103 97359	1210D-01	A20
NEXT ASSY	USED ON	REF DES
APPLICATION		

2 1

REVISIONS				
ZONE	LTR	DESCRIPTION	DATE	APPD
	—	RELEASED	11-23-76	RCB
	A	ADDED S1, S2, F1, F2 PER ECO. 1996	6-28-77	RDB
	B	PARTS LIST CHANGE PER ECO 2271	4-14-78	RDB
	C	ADDED NOTE 1 PER ECO 3920	10-5-81	RDB

D

C

B

A

TOLERANCES UNLESS OTHERWISE SPECIFIED		
DEC	FRAC	ANG

MATERIAL:

7-6

IG NO

ENGR	LCB	11-30-76
CHECK	RDB	11-30-76
DRFTMN	BARKER	11-23-76

AUSTRON INC.
AUSTIN, TEXAS

PC BOARD ASSY. - 100 KHZ OUTPUT AMPLIFIER

SIZE	CODE IDENT NO		
2	24672	103 97359	C
SCALE 1:1		SHEET OF	

4 3

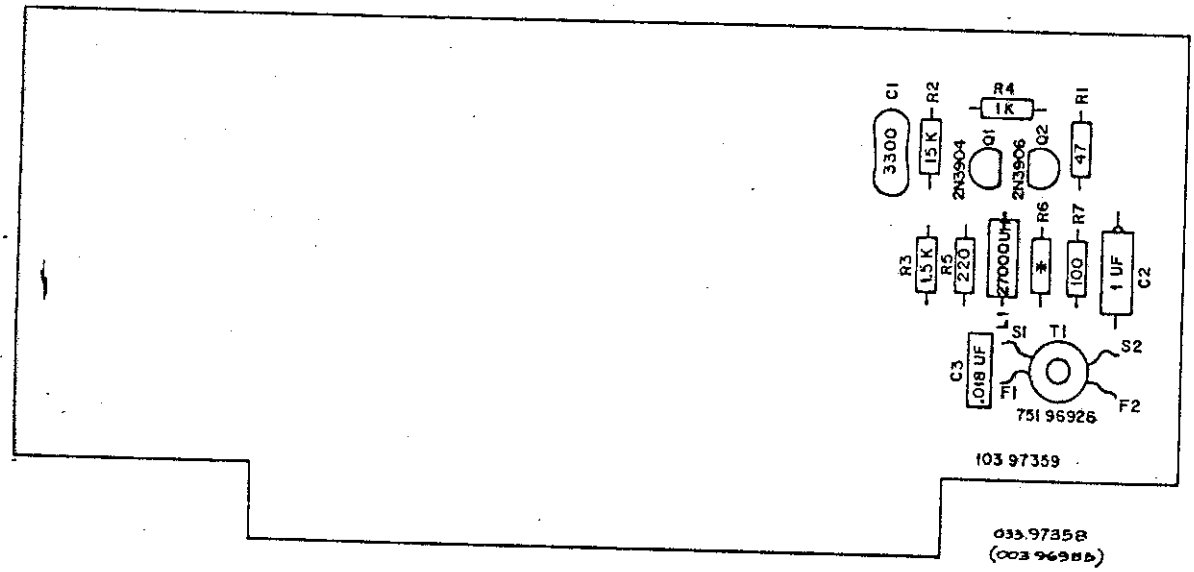

HEN INSTALLING T1, CONNECT "F1" LEAD
ITHOUT TRIMMING EXCESS LENGTH.

TES:

271 96208-1	1210D-01	A20
NEXT ASSY	USED ON	REF DES
APPLICATION		

MANUAL PARTS LIST MODEL 12100-01 24 OCT 84

ASSEMBLY PC BOARD ASSY-100KHZ OUTPUT AMP
ASSEMBLY NUMBER 10397359
REFERENCE DESIGNATOR PREFIX 1A20
QUANTITY 1 EA

REF DES	PART DESCRIPTION	AUSTRON PART	MFG PART	FIC
C1	3300 PF 500V 5 CAP DIP MICA	603000-0332	CM06FD332J03	81349
C2	1 UF 35V 10 CAP TANT	608017-0105	CS13BF105K	81349
C3	.018 UF 50V 10 CAP FILM	607050-0183	71901AB183K500AX	01002
L1	270000UH CHOKE	751104-0273	MS90537-66	96906
Q1	0.31W TO-92 XSTR NPNS SH	7022N3904	2N3904	81349
Q2	0.31W TO-92 XSTR PNPS SH	7022N3906	2N3906	81349
R1	RES FXD COMP 47 OHM 1/4W 10%	651102-0470	RC07GF470K	81349
R2	RES FXD COMP 15 K 1/4W 10%	651102-0153	RC07GF153K	81349
R3	RES FXD COMP 1.5 K 1/4W 10%	651102-0152	RC07GF152K	81349
R4	RES FXD COMP 1 K 1/4W 10%	651102-0102	RC07GF102K	81349
R5	RES FXD COMP 220 OHM 1/4W 10%	651102-0221	RC07GF221K	81349
R6	SELECTED1/4W 10 RES FXD COMP	651102-SEL		
R7	RES FXD COMP 100 OHM 1/4W 10%	651102-0101	RC07GF101K	81349
T1	TRANSFORMER 100KHZ	75196926		24672

7.3.3 10 MHz, 5 MHz, and 1 MHz Output Amplifier -- The Output Amplifier (A19) contains three similar amplifiers, plus a multiplier. This description will consider the 10 MHz amplifier.

7.3.3.1 Transformer T4 and dual transistor Q5 (along with their associated componenets) form a push-push doubler. The resulting 10 MHz signal is filtered by one-third (1/3). Since the signal from the emitter follower (Q6) is feed to the common-emitter, collector-tuned amplifier (Q7) through a winding on transformer T3, the stage has ac feedback. This amplifier is capable of supplying 1 V RMS into a 50 ohm load and is releatively insensitive to load changes.

REVISIONS				
ZONE	LTR	DESCRIPTION	DATE	APPROVED
	–	RELEASED	11-30-76	RDB

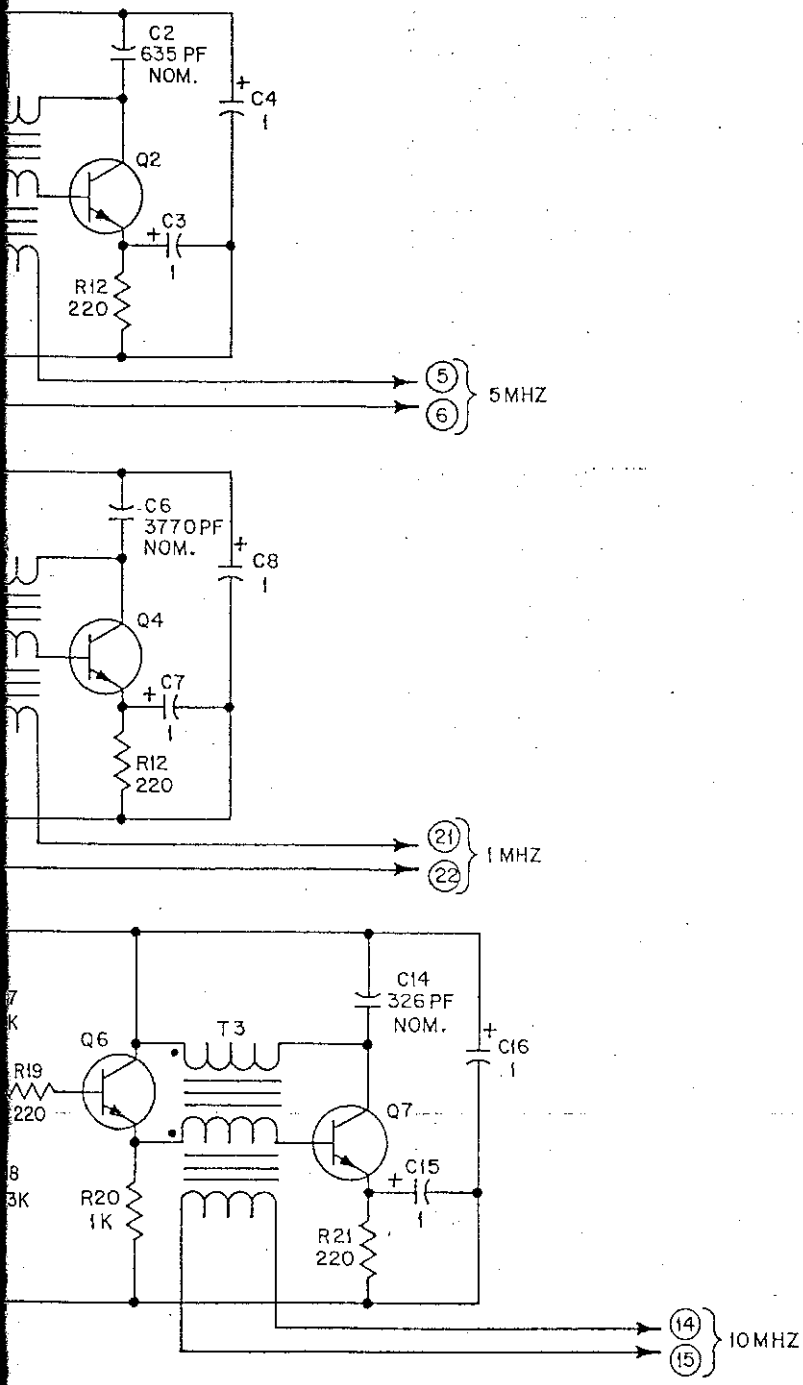

QTY REQD	ITEM NO	REF DES	PART NO	NOMENCLATURE	VENDOR
-1				LIST OF MATERIAL	

UNLESS OTHERWISE SPECIFIED
DIMENSIONS ARE IN INCHES
DO NOT SCALE DRAWINGS

TOLERANCES
UNLESS OTHERWISE SPECIFIED

DECIMALS	FRACTIONS	ANGLES

MATERIAL:

ENGINEER	LRCh	11-30-76
CHECKED		
DRAFTSMAN	BARKER	11-29-76

AUSTRON INC. AUSTIN, TEXAS

SCHEMATIC DIAGRAM - 10,5,1 MHZ
-OUTPUT-AMPLIFIER

SIZE	CODE IDENT NO.	
3	24672	123 97364

SCALE N/A | SHEET 1 OF 1

19	7-7
EF DES	FIG NO

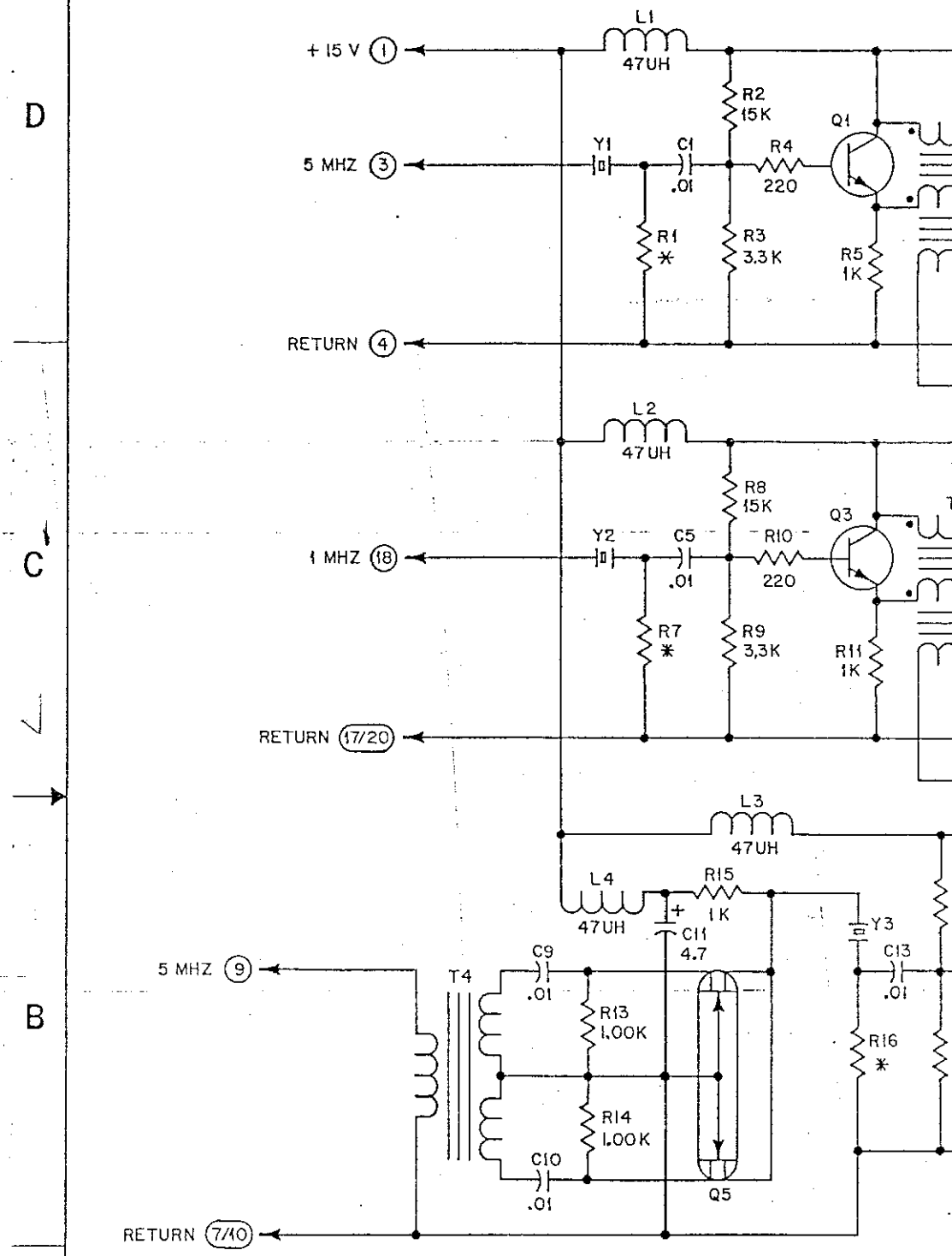

3. ALL RESISTORS ARE IN OHMS.
2. ALL CAPACITORS ARE IN MICROFARADS.
1. ALL TRANSISTORS ARE 2N3904.
NOTE, UNLESS OTHERWISE SPECIFIED:

103 97342	1210D-01	
NEXT ASSY	USED ON	
APPLICATIO		

2 1

REVISIONS				
ZONE	LTR	DESCRIPTION	DATE	APPD
	—	RELEASED	11-18-76	RJB
	A	ECO 1991: C14A WAS 56PF	6-28-77	RJB
	B	REVISED PARTS LIST PER ECO. 2886	4-16-79	RJB
	C	ADDED NOTE 1 PER ECO 3691	4-16-81	RJB

D

C

B

A

A19	7-8
REF DES	FIG NO
N	

TOLERANCES
UNLESS OTHERWISE SPECIFIED

DEC	FRAC	ANG

MATERIAL:

ENGR	LRH	11-30-76
CHECK		
DRFTMN	BARKER	11-16-76

AUSTRON INC.
AUSTIN, TEXAS

PC BOARD ASSY - 10, 5, 1 MHZ
OUTPUT AMPLIFIER

SIZE	CODE IDENT NO		
2	24672	10397342	C

SCALE 1:1 SHEET OF

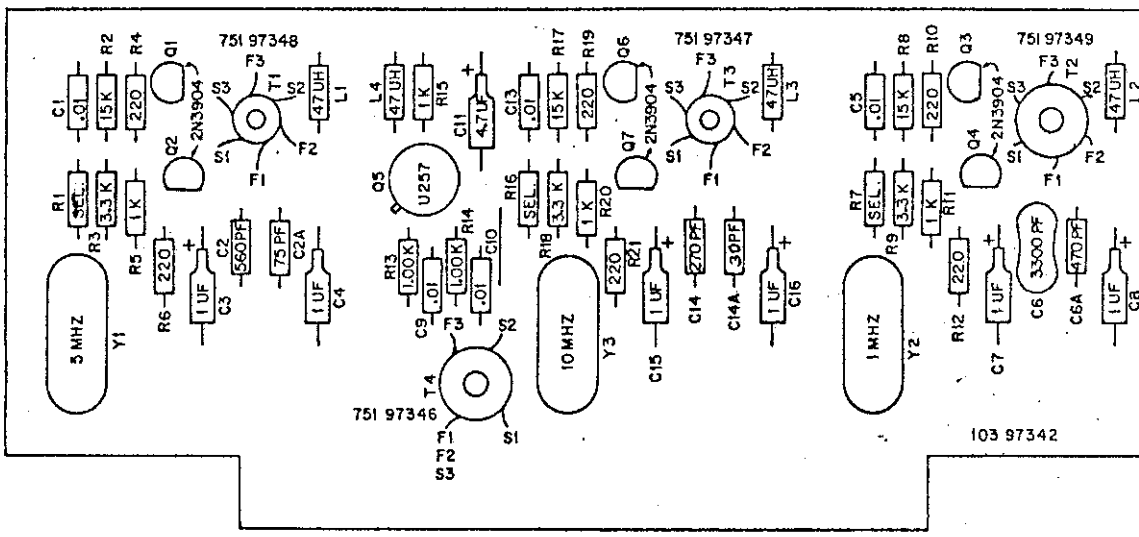

NOTES:

1. R13 AND R14 ARE 1K 1/8W 1% RESISTORS

27196208	1210D-01
NEXT ASSY	USED ON
APPLICAT	

ASSEMBLY PCB ASSY 10,5,1MHZ OUTPUT AMP
ASSEMBLY NUMBER 10397342
REFERENCE DESIGNATOR PREFIX 1A19
QUANTITY 1 EA

REF DES	PART DESCRIPTION	AUSTRON PART	MFG PART	FIC
C1	CAP CERA AXL X7R .01 UF 100V 10%	601205-0103	CK12BX103K	81349
C2	SELECTED CAP DIP MICA			
C3	1 UF 35V 10 CAP TANT	608017-0105	CS13BF105K	81349
C4	1 UF 35V 10 CAP TANT	608017-0105	CS13BF105K	81349
C5	CAP CERA AXL X7R .01 UF 100V 10%	601205-0103	CK12BX103K	81349
C6	SELECTED CAP DIP MICA			
C7	1 UF 35V 10 CAP TANT	608017-0105	CS13BF105K	81349
C8	1 UF 35V 10 CAP TANT	608017-0105	CS13BF105K	81349
C9	CAP CERA AXL X7R .01 UF 100V 10%	601205-0103	CK12BX103K	81349
C10	CAP CERA AXL X7R .01 UF 100V 10%	601205-0103	CK12BX103K	81349
C11	4.7 UF 35V 10 CAP TANT	608017-0475	CS13BF475K	81349
C12	NOT USED			
C13	CAP CERA AXL X7R .01 UF 100V 10%	601205-0103	CK12BX103K	81349
C14	SELECTED CAP DIP MICA			
C15	1 UF 35V 10 CAP TANT	608017-0105	CS13BF105K	81349
C16	1 UF 35V 10 CAP TANT	608017-0105	CS13BF105K	81349
L1	47 UH CHOKE	751101-0470	1025-60	99800
L2	47 UH CHOKE	751101-0470	1025-60	99800
L3	47 UH CHOKE	751101-0470	1025-60	99800
L4	47 UH CHOKE	751101-0470	1025-60	99800
Q1	0.31W TO-92 XSTR NPNS SH	7022N3904	2N3904	81349
Q2	0.31W TO-92 XSTR NPNS SH	7022N3904	2N3904	81349
Q3	0.31W TO-92 XSTR NPNS SH	7022N3904	2N3904	81349
Q4	0.31W TO-92 XSTR NPNS SH	7022N3904	2N3904	81349
Q5	0257 FET, TRANSISTOR	7020257	0257	17856
Q6	0.31W TO-92 XSTR NPNS SH	7022N3904	2N3904	81349
Q7	0.31W TO-92 XSTR NPNS SH	7022N3904	2N3904	81349
R2	RES FXD COMP 15 K 1/4W 10%	651102-0153	RC07GF153K	81349
R3	RES FXD COMP 3.3 K 1/4W 10%	651102-0332	RC07GF332K	81349
R4	RES FXD COMP 220 OHM 1/4W 10%	651102-0221	RC07GF221K	81349
R5	RES FXD COMP 1 K 1/4W 10%	651102-0102	RC07GF102K	81349
R8	RES FXD COMP 15 K 1/4W 10%	651102-0153	RC07GF153K	81349
R9	RES FXD COMP 3.3 K 1/4W 10%	651102-0332	RC07GF332K	81349

ASSEMBLY PCB ASSY 10,5,1MHZ OUTPUT AMP (CONT)
ASSEMBLY NUMBER 10397342
REFERENCE DESIGNATOR PREFIX 1A19
QUANTITY 1 EA

REF DES	PART DESCRIPTION	AUSTRON PART	MFG PART	FIC
R10	RES FXD COMP 220 OHM 1/4W 10%	651102-0221	RC07GF221K	81349
R11	RES FXD COMP 1 K 1/4W 10%	651102-0102	RC07GF102K	81349
R12	RES FXD COMP 220 OHM 1/4W 10%	651102-0221	RC07GF221K	81349
R13	1 K 1/8W 1 RES FXD FILM	653001-1001	CT41K1%	24546
R14	1 K 1/8W 1 RES FXD FILM	653001-1001	CT41K1%	24546
R15	RES FXD COMP 1 K 1/4W 10%	651102-0102	RC07GF102K	81349
R16	SELECTED1/4W 10 RES FXD COMP	651102-SEL		
R17	RES FXD COMP 15 K 1/4W 10%	651102-0153	RC07GF153K	81349
R18	RES FXD COMP 3.3 K 1/4W 10%	651102-0332	RC07GF332K	81349
R19	RES FXD COMP 220 OHM 1/4W 10%	651102-0221	RC07GF221K	81349
R20	RES FXD COMP 1 K 1/4W 10%	651102-0102	RC07GF102K	81349
R21	RES FXD COMP 220 OHM 1/4W 10%	651102-0221	RC07GF221K	81349
T1	TRANSFORMER-5MHZ OUTPUT W/FEEDBK	75197348		24672
T2	XFMR-1 MHZ OUTPUT W/FEEDBACK	75197349		24672
T3	XFMR 10 MHZ OUTPUT W/FEEDBACK	75197347		24672
T4	XFMR WIDE BAND PHASE SPLITTING	75197346		24672
Y1	XTAL, 5.000000 MHZ FILTER	752B5000000	4051122-C	74306
Y2	XTAL, 1.000000 MHZ FILTER	752A1000000	4051122	74306
Y3	XTAL, 10.000000 MHZ	752A10000000	4051122	74306

7.4 MODEL 1210D-02 PORTABLE CRYSTAL CLOCK

7.4.1 The model 1210D-02 Portable Crystal Clock has 5 MHz, 1 MHz, and 60 Hz sinusoidal outputs, as well as 1 PPS and 1 PP10S pulse outputs. These outputs retain the specifications detailed in section 1.3. This version is the same as the model 1210D, with the addition of a 60 Hz Sine Converter pcb (A21), as well as the modification of the Divider pcb (A14), the Pulse Amplifier pcb (A13), and the Final Filter pcb (A3).

REVISIONS				
ZONE	LTR	DESCRIPTION	DATE	APPD
	—	RELEASED	3-6-78	RCB
	A	ADDED 60 PPS LINE PER ECO 3180	11-13-79	RCB

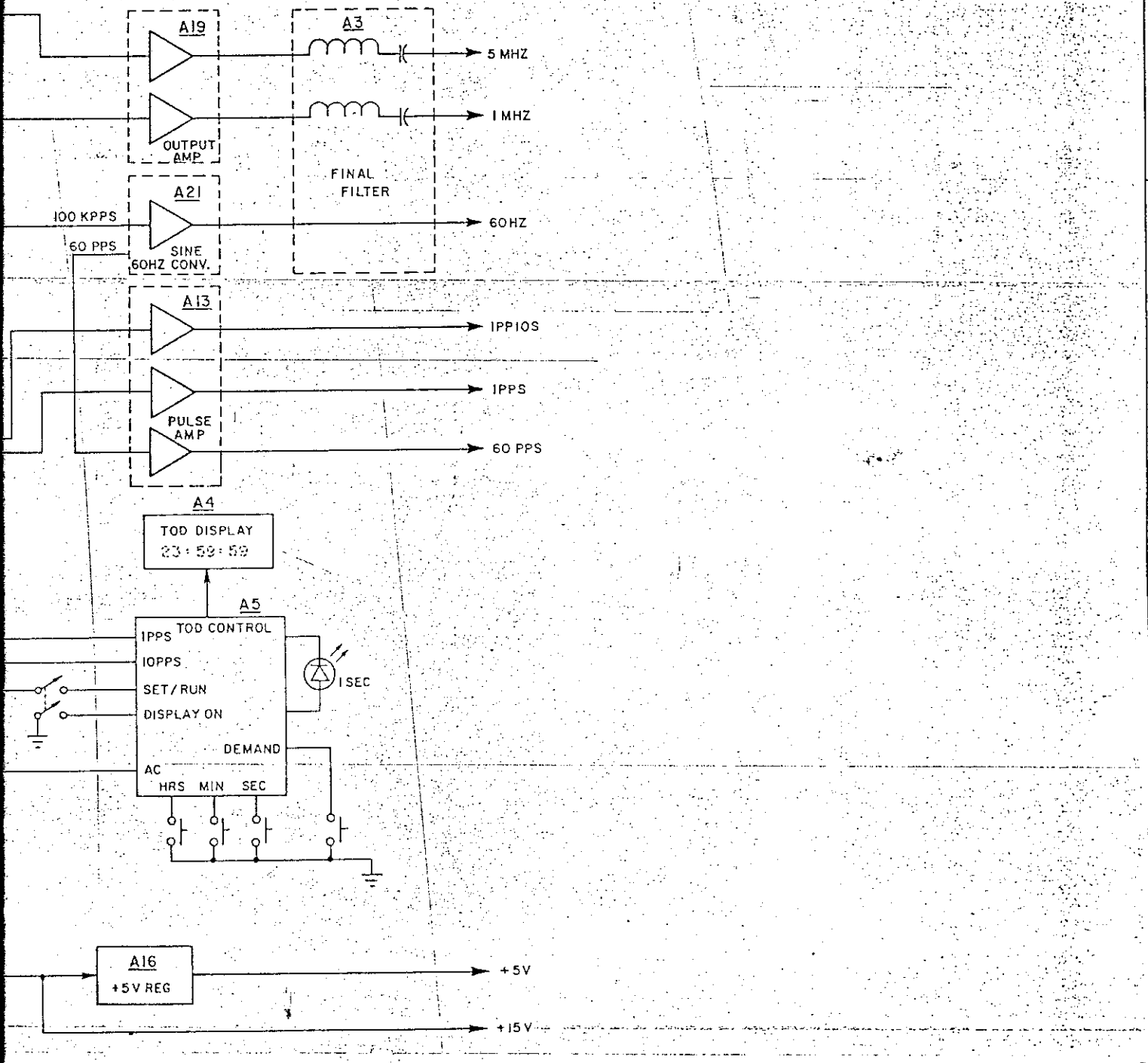

127 96207	1210D-02		7-9
NEXT ASSY	USED ON	REF DES	FIG NO
APPLICATION			

TOLERANCES UNLESS OTHERWISE SPECIFIED

DECIMALS	FRACTIONS	ANGLES

MATERIAL:

ENGR	L.R. Scot	2-23-78
CHECK	R. Bachin	2-22-78
DRFTSMN	S. Schmidt	2-21-78

AUSTRON INC.
AUSTIN, TEXAS

BLOCK DIAGRAM
1210D-02 CRYSTAL CLOCK

SIZE	CODE IDENT NO		
3	24672	124 96556	A
SCALE NA			SHEET 1 OF 1

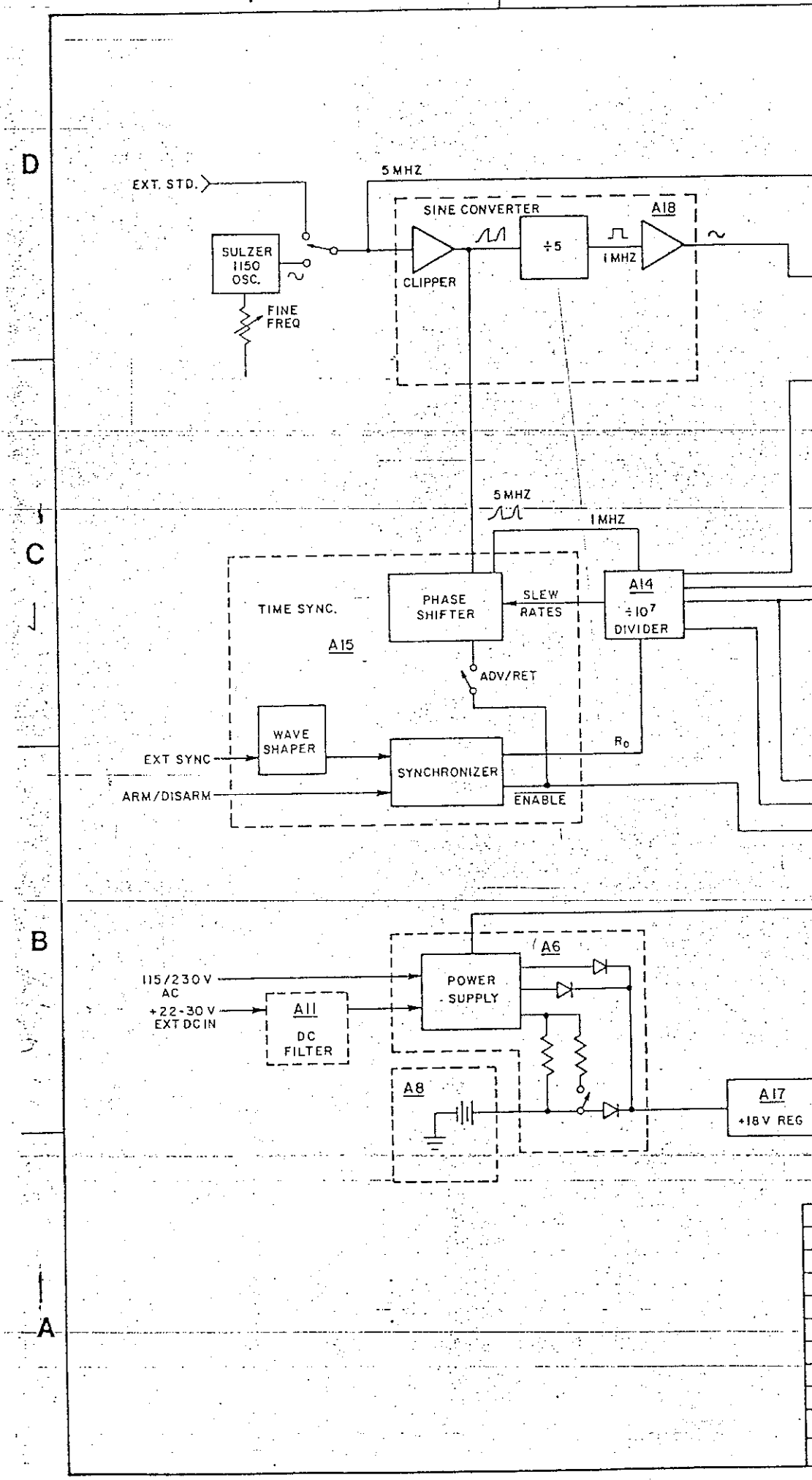
4
D
C
B
A
EXT. STD.
5 MHZ
SINE CONVERTER
A18
SULZER 1150 OSC.
FINE FREQ
CLIPPER
÷5
1 MHZ
5 MHZ
1 MHZ
TIME SYNC.
A15
PHASE SHIFTER
SLEW RATES
A14
÷10⁷ DIVIDER
ADV/RET
WAVE SHAPER
EXT SYNC
SYNCHRONIZER
R0
ARM/DISARM
ENABLE
115/230 V AC
+22-30 V EXT DC IN
A11
DC FILTER
A6
POWER SUPPLY
A8
A17
+18 V REG

REVISIONS				
ZONE	LTR	DESCRIPTION	DATE	APPD
	—	RELEASED	3-15-78	RGB
	A	REVISED PER ECO 2343 & 2365	4-28-78	RGB
	B	REVISED PER ECO 3178	11-14-79	RGB

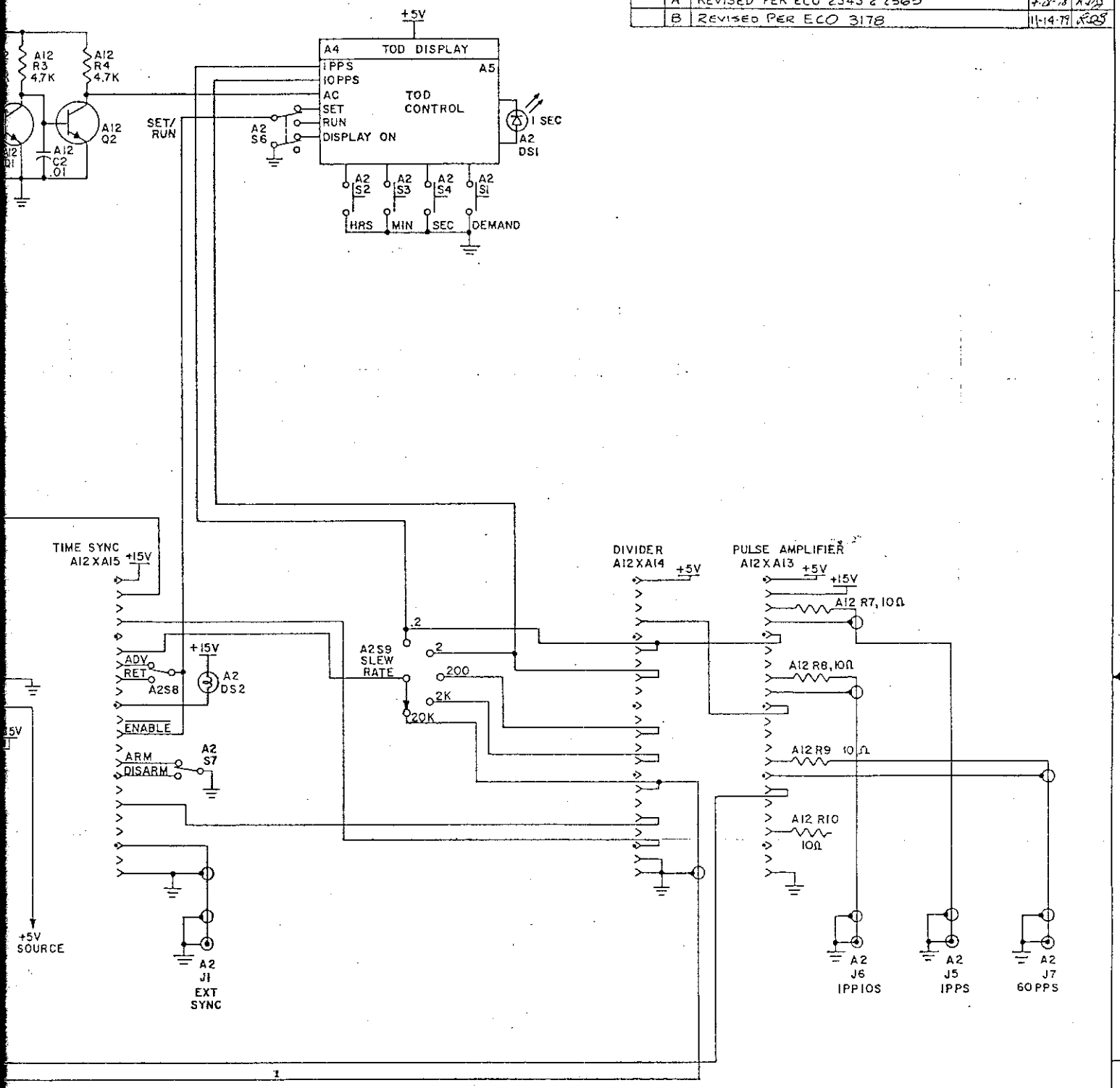

127 96207	1210D-02		7-10
NEXT ASSY	USED ON	REF DES	FIG NO
APPLICATION			

TOLERANCES UNLESS OTHERWISE SPECIFIED

DECIMALS	FRACTIONS	ANGLES

MATERIAL: N/A

ENGR		3/16/78
CHECK		3-15-78
DRFTSMN	LDP	2/23/78

AUSTRON INC. AUSTIN, TEXAS

SCHEMATIC DIAGRAM - 1210D-02 CRYSTAL CLOCK

SIZE	CODE IDENT NO		
4	24672	123 96571	B

SCALE NA SHEET 1 OF 1

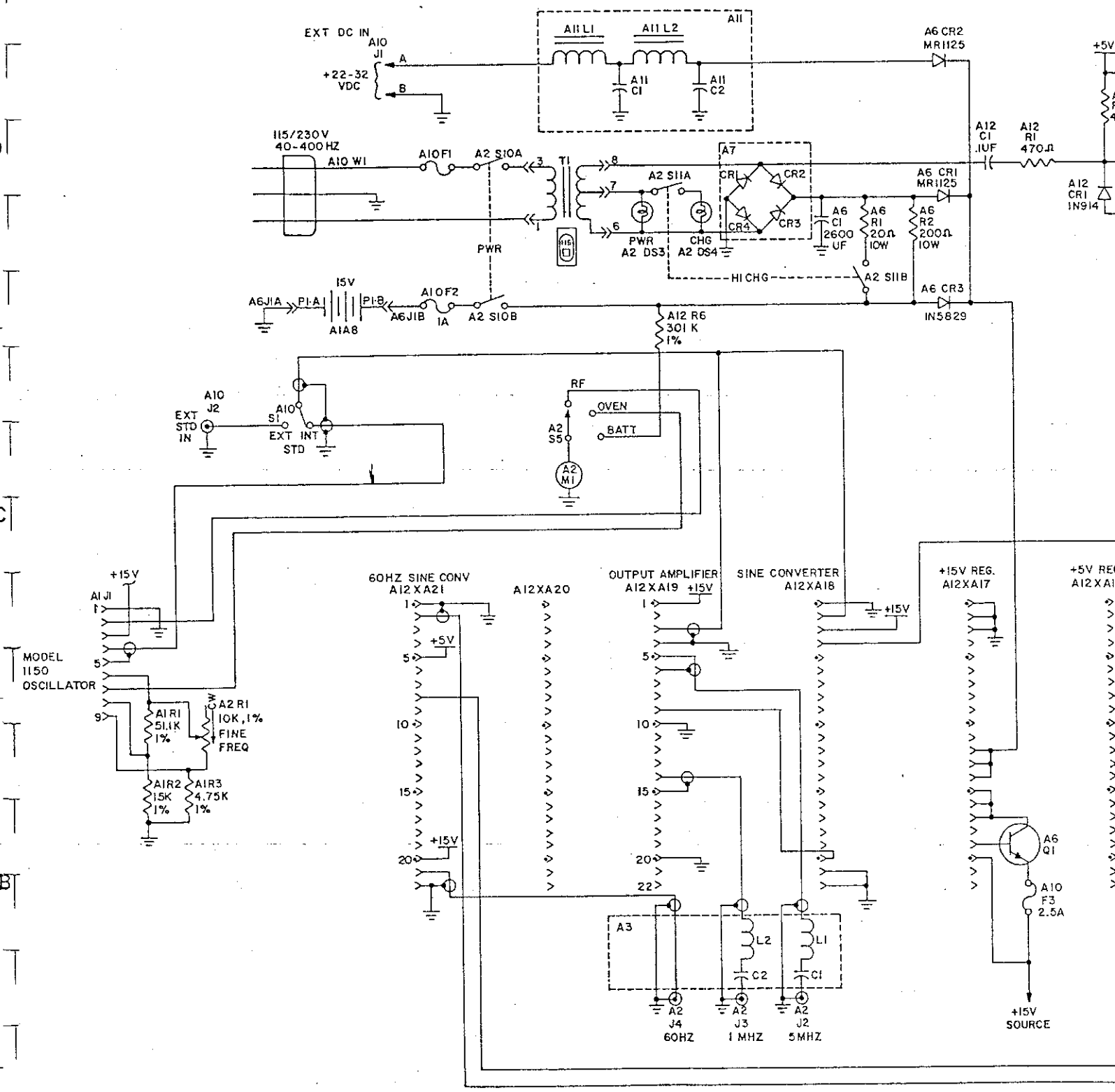

3. A6Q1 IS AN MJE3055.

2. A12Q1 AND A12Q2 ARE 2N3904.

1. ALL RESISTORS 1/4W 10% UNLESS OTHERWISE SPECIFIED.

NOTES:

MANUAL PARTS LIST MODEL 1210D-02 24 OCT 84

ASSEMBLY CRYSTAL CLOCK, MODEL 1210D-02
ASSEMBLY NUMBER 32196206-2
REFERENCE DESIGNATOR PREFIX
QUANTITY 1 EA

REF DES	PART DESCRIPTION	AUSTRON PART	MFG PART	FIC
	PCB ASSY, EXTENDER	10393765		24672
	MANUAL	12796207		24672
	CLAMP, AN3057-6	551013-0006	AN3057-6	81352
	CONN, STRAIGHT 3 SOCKET CONTACT	551106-0017	MS3106A-14S-1S	96906
	TUNING WAND	901000-8605	8605	20018
1	FINAL ASSY, MODEL 1210D	27196208-2		24672

ASSEMBLY FINAL ASSY, MODEL 1210D
ASSEMBLY NUMBER 27196208-2
REFERENCE DESIGNATOR PREFIX 1
QUANTITY 1 EA

REF DES	PART DESCRIPTION	AUSTRON PART	MFG PART	FIC
A1	NOT USED			
A2	PANEL ASSY FRONT 1210D	10996193-02		
A3	PCB ASSY, OUTPUT FILTER	10396735-1		24672
A4	PCB ASSY, TOD DISPLAY	10396186		24672
A5	PCB ASSY I.O.D. CONTROL	10396188		24672
A6	PLATE ASSY (A6)	11096211		24672
A7	PC BOARD ASSY-BRIDGE	10394664		24672
A8	BATTERY PACK ASSY	12096212		24672
A9	XTLOSC, 1150 (70-85 DEG)	30296818		24672
A10	PANEL ASSY, REAR	10996195		24672
A11	PCB ASSY, DC FILTER	10396200		24672
A12	PCB ASSY, INTERCONNECT	10396769		24672
A13	PC BOARD ASSY-PULSE AMPLIFIER	10394595-3		24672
A14	PC BOARD ASSY, DIVIDER	10396614-1		24672
A15	PCB ASSY, TIME SYNC	10394618		24672
A16	PC BOARD ASSY. +5 VDC REGULATOR	10394607		24672
A17	PCB ASSY, +15 VDC REGULATOR	10396197		24672
A18	PCB ASSY, SINE CONVERTER	10396025-1		24672
A19	PCB ASSY OUTPUT AMPLIFIER	10396031-1		24672
A20	NOT USED			
A21	PCB ASSY., 60HZ SINE CONVERTER	10396517		24672
MP1	COVER, FRONT	00794304		24672
MP2	COVER-INSTRUMENT	00796209-1		24672
MP3	COVER-INSTRUMENT	00796209-2		24672
MP4	BAR RECTANGULAR	01096753		24672
MP5	.171X1/4X1/2 SPACER ROUND	520830-0005	9228-SS171-0	06540
MP6	.171X1/4X1/2 SPACER ROUND	520830-0005	9228-SS171-0	06540
MP7	.171X1/4X1/2 SPACER ROUND	520830-0005	9228-SS171-0	06540
MP8	.171X1/4X1/2 SPACER ROUND	520830-0005	9228-SS171-0	06540
MP9	WASHER, PRELOAD	02096741		24672
MP10	WASHER, PRELOAD	02096741		24672
MP11	WASHER, PRELOAD	02096741		24672
MP12	WASHER, PRELOAD	02096741		24672

ASSEMBLY FINAL ASSY, MODEL 1210D (CONT)
ASSEMBLY NUMBER 27196208-2
REFERENCE DESIGNATOR PREFIX 1
QUANTITY 1 EA

REF DES	PART DESCRIPTION	AUSTRON PART	MFG PART	FIC
MP14	SHOCK MOUNT BUSHING	520205-0005	10R4-15018	14519
MP15	SHOCK MOUNT BUSHING	520205-0005	10R4-15018	14519
MP16	SHOCK MOUNT BUSHING	520205-0005	10R4-15018	14519
MP17	SHOCK MOUNT BUSHING	520205-0005	10R4-15018	14519
MP18	SHOCK DRIVE WASHER	520205-0010	10R41500	14519
MP19	SHOCK DRIVE WASHER	520205-0010	10R41500	14519
MP20	SHOCK DRIVE WASHER	520205-0010	10R41500	14519
MP21	SHOCK DRIVE WASHER	520205-0010	10R41500	14519
MP22	BUMPER, RUBBER W/HARDWARE	520210-2198	2198	83330
MP23	BUMPER, RUBBER W/HARDWARE	520210-2198	2198	83330
MP24	BUMPER, RUBBER W/HARDWARE	520210-2198	2198	83330
MP25	BUMPER, RUBBER W/HARDWARE	520210-2198	2198	83330

7.4.2 60 Hz Sine Converter -- This pcb (A21) generates a 60 Hz sine wave from a 100 kHz TTL input.

7.4.2.1 A 100 kHz square wave is applied to the base of Q1 which is a common-emitter, collector-tuned amplifier, which is tuned to the third harmonic, 300 kHz. Therefore, there is a multiplication of three in this stage.

7.4.2.2 Transistor Q2 is a saturated clipper which is used to generate a fast fall time suitable for driving the TTL dividers.

7.4.2.3 The integrated circuits U1 and U2 are cascaded dividers which divide the 300 kHz signal to 60 Hz.

7.4.2.4 Op Amp U3 is a second-order VCVS bandpass filter which has a Q=10 with G=10 at fo=60 Hz. In a filter of this configuration the op amp and resistors R12 and R13 form a voltage controlled source. Resistor R12 and R13 set the gain while capacitors C4 and C5 and resistors R9, R10 and R11 set the center frequency as well as the Hi and Lo roll off response.

7.4.2.5 Transistor Q3, whose base bias is derived from resistors R14 and R15, is a driver stage for the push-pull, capacitor-coupled output amplifier, which is composed of CR1, CR2, Q4, Q5 and associated components. This amplifier is capable of supplying 1 V RMS into a 50 ohm load.

REVISIONS				
ZONE	LTR	DESCRIPTION	DATE	APPD
	A	REDRAWN PER ECO 3119	11-16-79	RDS

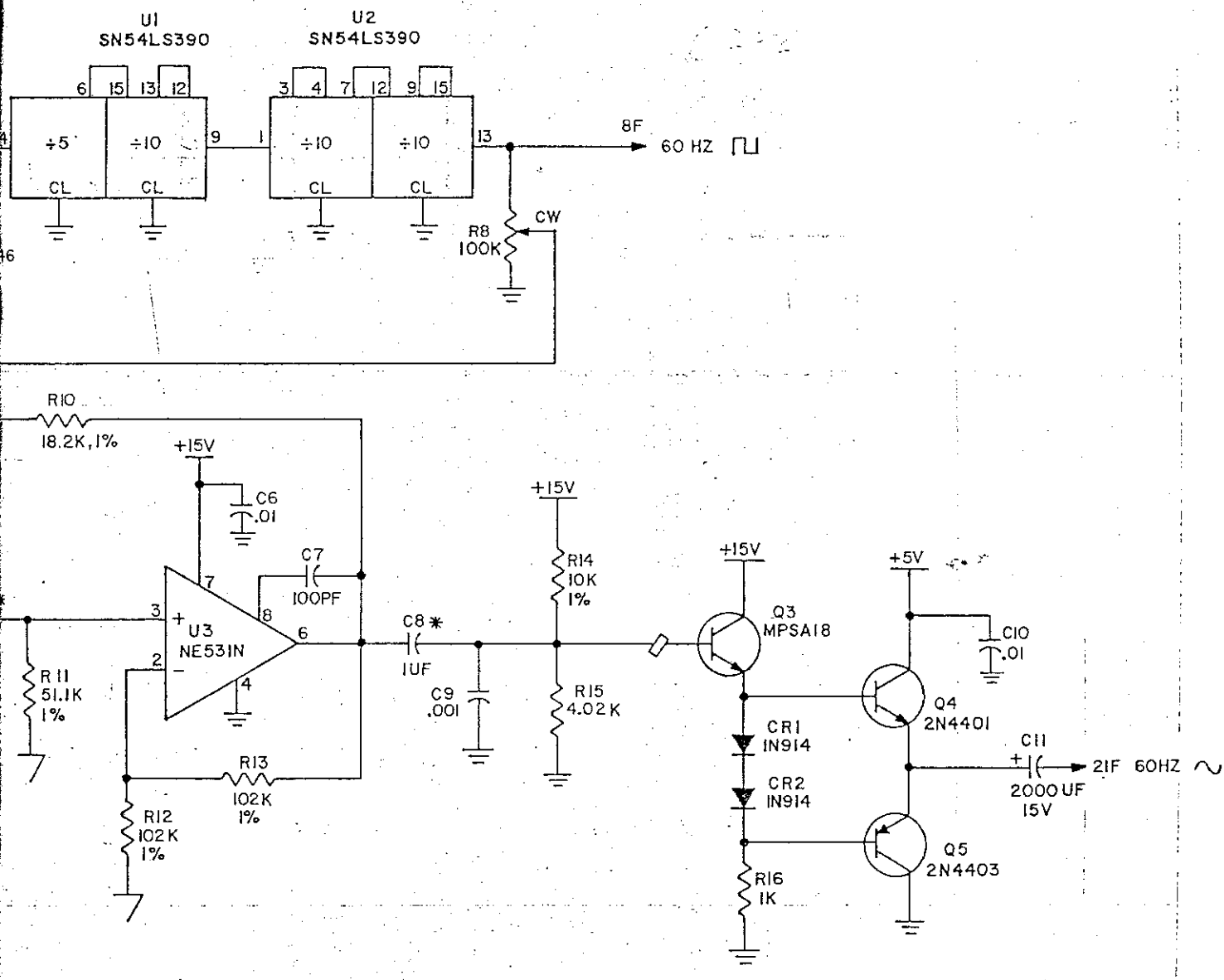

0396517	1210D-02	A21	7-11
NEXT ASSY	USED ON	REF DES	FIG NO
APPLICATION			

TOLERANCES
UNLESS OTHERWISE SPECIFIED

DECIMALS	FRACTIONS	ANGLES

MATERIAL:

ENGR	Lodh	11-16-79
CHECK	R. Fenter	11-16-79
DRFTSMN	LDP	9-28-79

AUSTRON INC.
AUSTIN, TEXAS

SCHEMATIC, 60 HZ SINE CONVERTER

SIZE	CODE IDENT NO		
3	24672	12396518	A

SCALE | SHEET OF

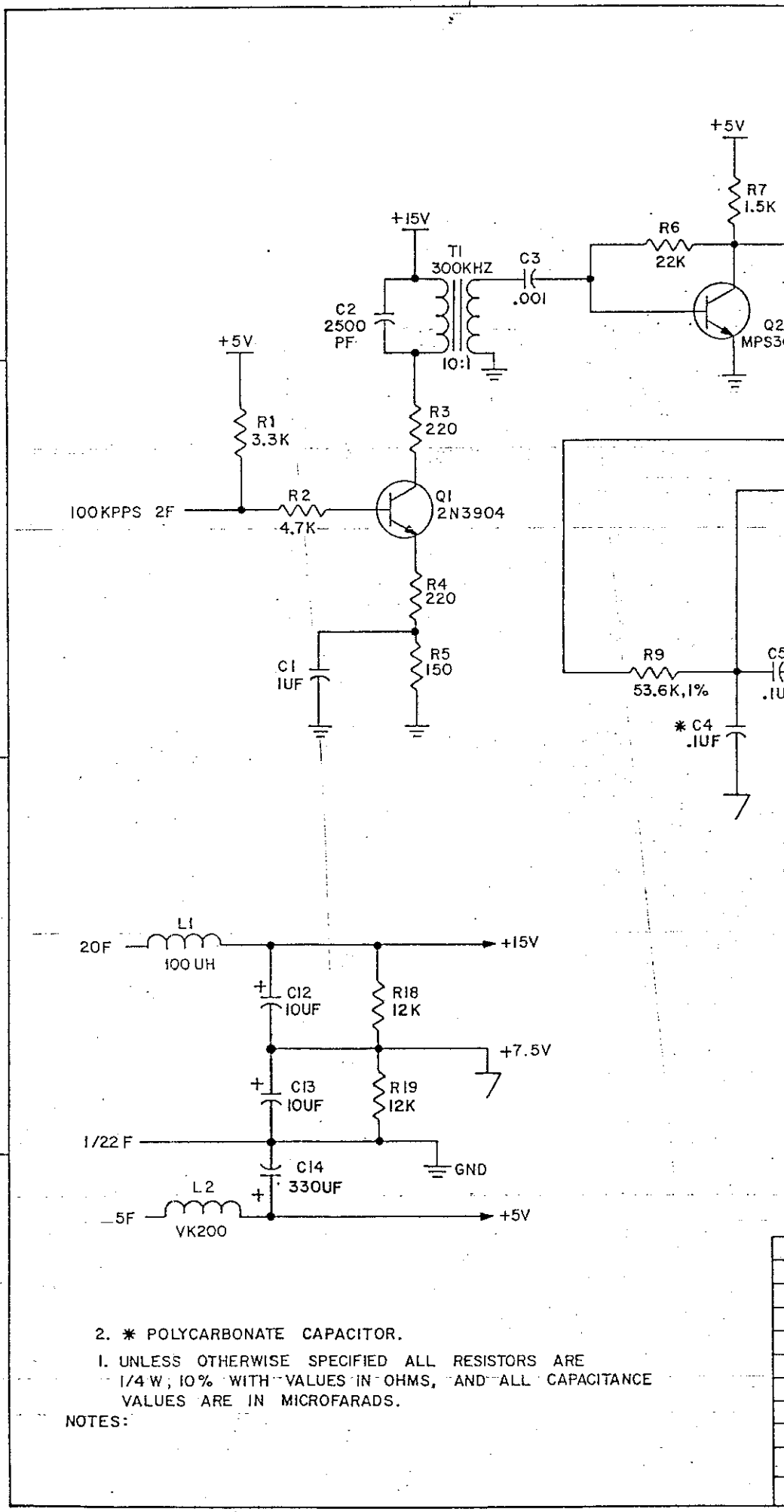

2. * POLYCARBONATE CAPACITOR.

1. UNLESS OTHERWISE SPECIFIED ALL RESISTORS ARE 1/4 W, 10% WITH VALUES IN OHMS, AND ALL CAPACITANCE VALUES ARE IN MICROFARADS.

NOTES:

REVISIONS				
ZONE	LTR	DESCRIPTION	DATE	APPD
	A	REDRAWN PER ECO 3119	11-16-79	RDB
	B	P/L'S CHANGED PER ECO 4763	11-15-83	RDB

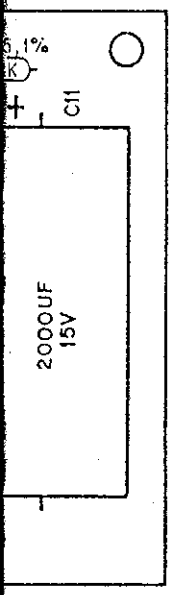

A21	7-12	TOLERANCES UNLESS OTHERWISE SPECIFIED			AUSTRON INC. AUSTIN, TEXAS
		DEC	FRAC	ANG	PC BOARD ASSY, 60 HZ SINE CONVERTER
		MATERIAL:			
REF DES	FIG NO	ENGR	LLD	11-16-79	SIZE 2 / CODE IDENT NO 24672 / 10396517 / B
		CHECK			
ON		DRFTMN	BARKER	11-16-79	SCALE NONE / SHEET 1 OF 1

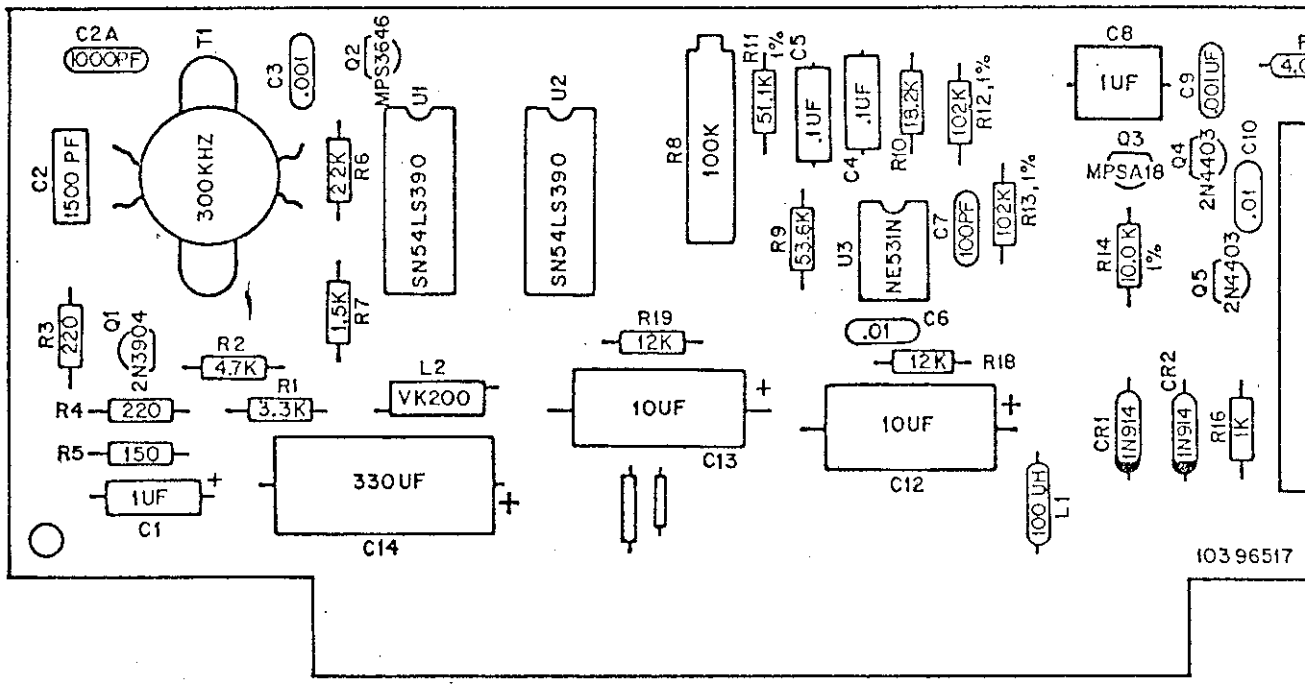

27196208-2	1210D-02
NEXT ASSY	USED ON
APPLICAT	

MANUAL PARTS LIST MODEL 1210D-02 24 OCT 84

ASSEMBLY PCB ASSY., 60HZ SINE CONVERTER (CONT)
ASSEMBLY NUMBER 10396517
REFERENCE DESIGNATOR PREFIX 1A21
QUANTITY EA

REF DES	PART DESCRIPTION	AUSTRON PART	MFG PART	FIC
R13	102 K 1/8W 1 RES FXD FILM	653001-1023	CT4102K1%	24546
R14	10 K 1/8W 1 RES FXD FILM	653001-1002	CT410K1%	24546
R15	4.02K 1/8W 1 RES FXD FILM	653001-4021	CT44.02K1%	24546
R16	RES FXD COMP 1 K 1/4W 10%	651102-0102	RC07GF102K	81349
R17	RES FXD COMP 12 K 1/4W 10%	651102-0123	RC07GF123K	81349
R18	RES FXD COMP 12 K 1/4W 10%	651102-0123	RC07GF123K	81349
T1	TRANSFORMER, 300KHZ 10:1	75198118		24672
U1	IC DUAL DECADE COUNTER	703SN74LS390	SN74LS390N	01295
U2	IC DUAL DECADE COUNTER	703SN74LS390	SN74LS390N	01295
U3	IC HIGH SLEW RATE OPERATIONAL AMPLF	703NE531V	NE531N	18324

7.5 MODEL 1210D-03 PORTABLE CRYSTAL CLOCK

7.5.1 The Model 1210D-03 Portable Crystal Clock has 10 MHz, 5 MHz and 1 MHz sinusoidal outputs as well as 100 PPS, 1 PPS and 1 PPM outputs. The outputs retain the specifications detailed in section 1.3. This version is the same as the model 1210D, except that the Output Amplifier (A19) has been replaced with the 10 MHz, 5 MHz, 1 MHz Output Amplifier (AUSTRON Part Number 10397342), which is covered under section 7.3.3. The Final Filter (A3) has been replaced by AUSTRON Part Number 10397355-1, covered under Figure 7-4. The Pulse Amplifier (A13) is AUSTRON Part Number 10394595-3 covered under section 4.9. The Divider (A14) has been replaced by AUSTRON Part Number 10396614-1.

REVISIONS				
ZONE	LTR	DESCRIPTION	DATE	APPD

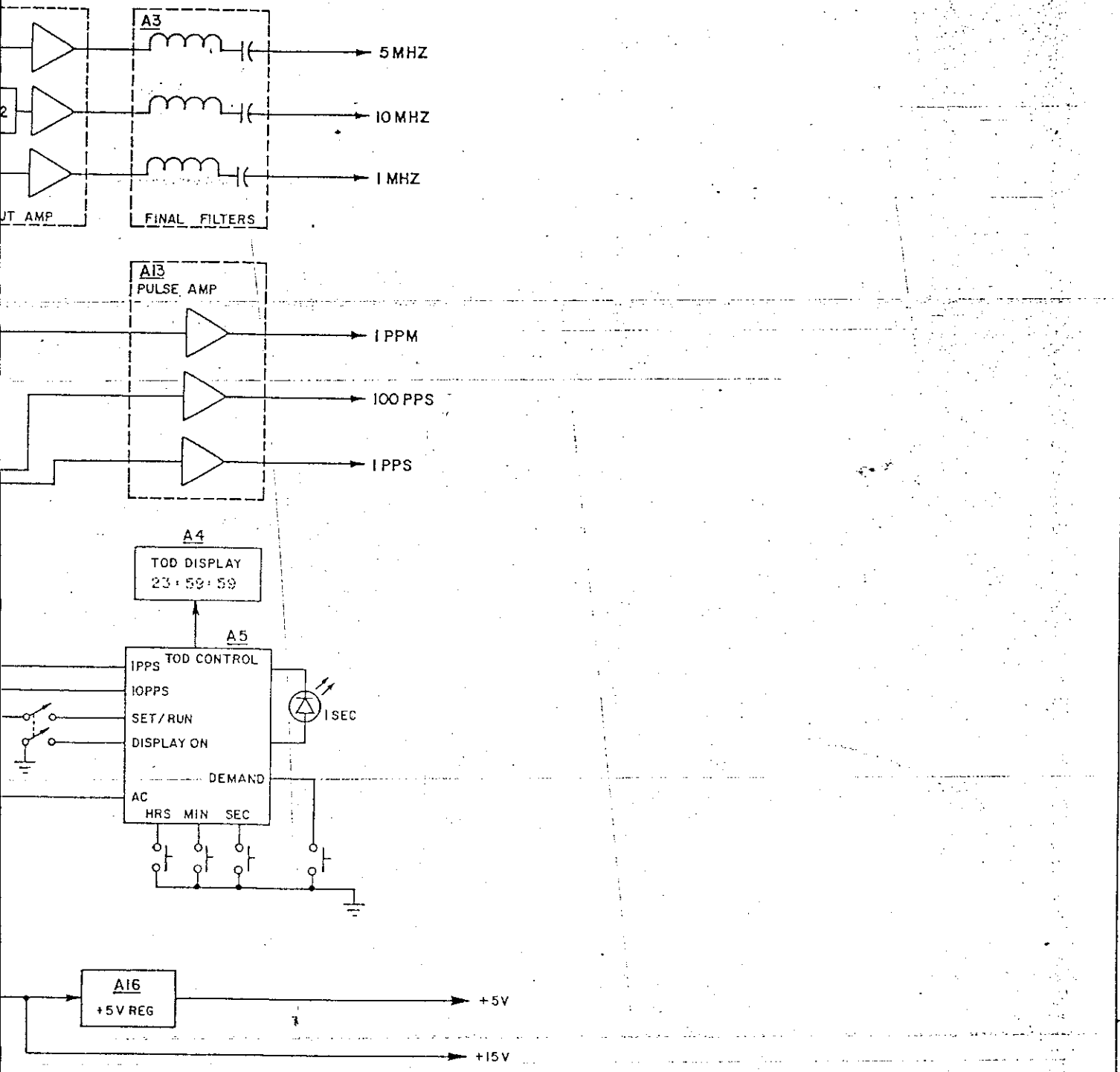

96207	1210D-03		7-13
XT ASSY	USED ON	REF DES	FIG NO

APPLICATION

TOLERANCES
UNLESS OTHERWISE SPECIFIED

DECIMALS	FRACTIONS	ANGLES

MATERIAL:

ENGR	L.L. Scott Jr	4-11-78
CHECK	R. Barker	4-6-78
DRFTSMN	LDP	4-6-78

AUSTRON INC.
AUSTIN, TEXAS

BLOCK DIAGRAM
1210D-03 CRYSTAL CLOCK

SIZE	CODE IDENT NO	
3	24672	124 96625

SCALE NA | SHEET 1 OF 1

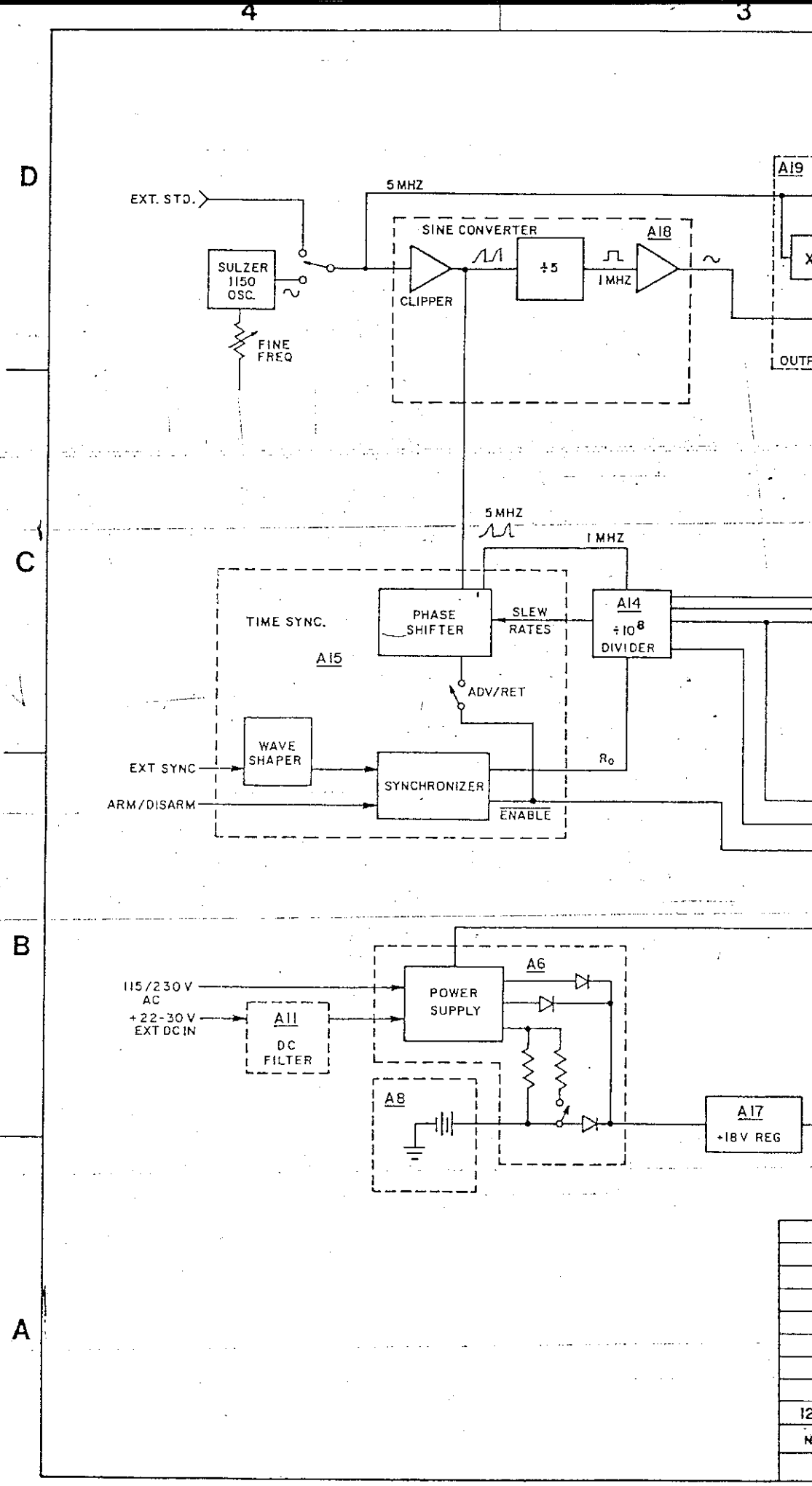
4
3
D
C
B
A
EXT. STD.
5 MHZ
A19
SINE CONVERTER
A18
SULZER 1150 OSC.
÷5
1 MHZ
CLIPPER
FINE FREQ
OUTP
5 MHZ
1 MHZ
TIME SYNC.
A15
PHASE SHIFTER
SLEW RATES
A14
÷10⁸ DIVIDER
ADV/RET
WAVE SHAPER
EXT SYNC
SYNCHRONIZER
ARM/DISARM
ENABLE
R₀
115/230 V AC
+22-30 V EXT DC IN
A11
DC FILTER
POWER SUPPLY
A6
A8
A17
+18 V REG

ZONE	LTR	DESCRIPTION	DATE	APPD
	A	REVISED PER ECO 2342 & 2364	4-22-78	RDG
	B	A1 J1 PINS 2&7 WERE OPPOSITE ECO 4602 & 2663		

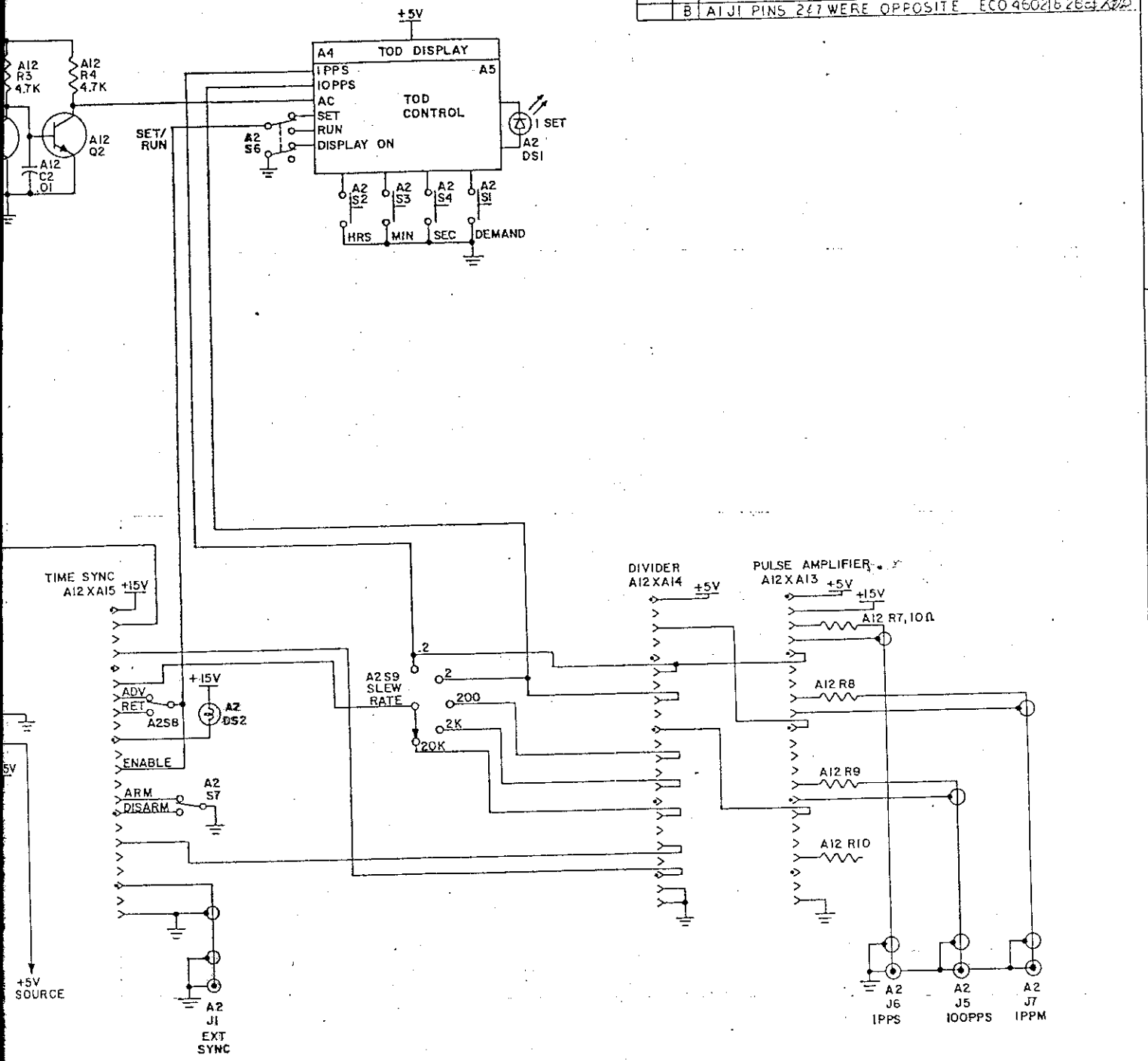

127 96207	1210D-03		7-14
NEXT ASSY	USED ON	REF DES	FIG NO
APPLICATION			

TOLERANCES UNLESS OTHERWISE SPECIFIED

DECIMALS	FRACTIONS	ANGLES

MATERIAL:

ENGR	L.L. Jewett	4-11-78
CHECK	R. Fowler	4-6-78
DRFTSMN	LDP	2/23/78

AUSTRON INC.
AUSTIN, TEXAS

SCHEMATIC DIAGRAM - 1210D-03 CRYSTAL CLOCK

SIZE	CODE IDENT NO		
4	24672	123 96624	B

SCALE NA

SHEET 1 OF 1

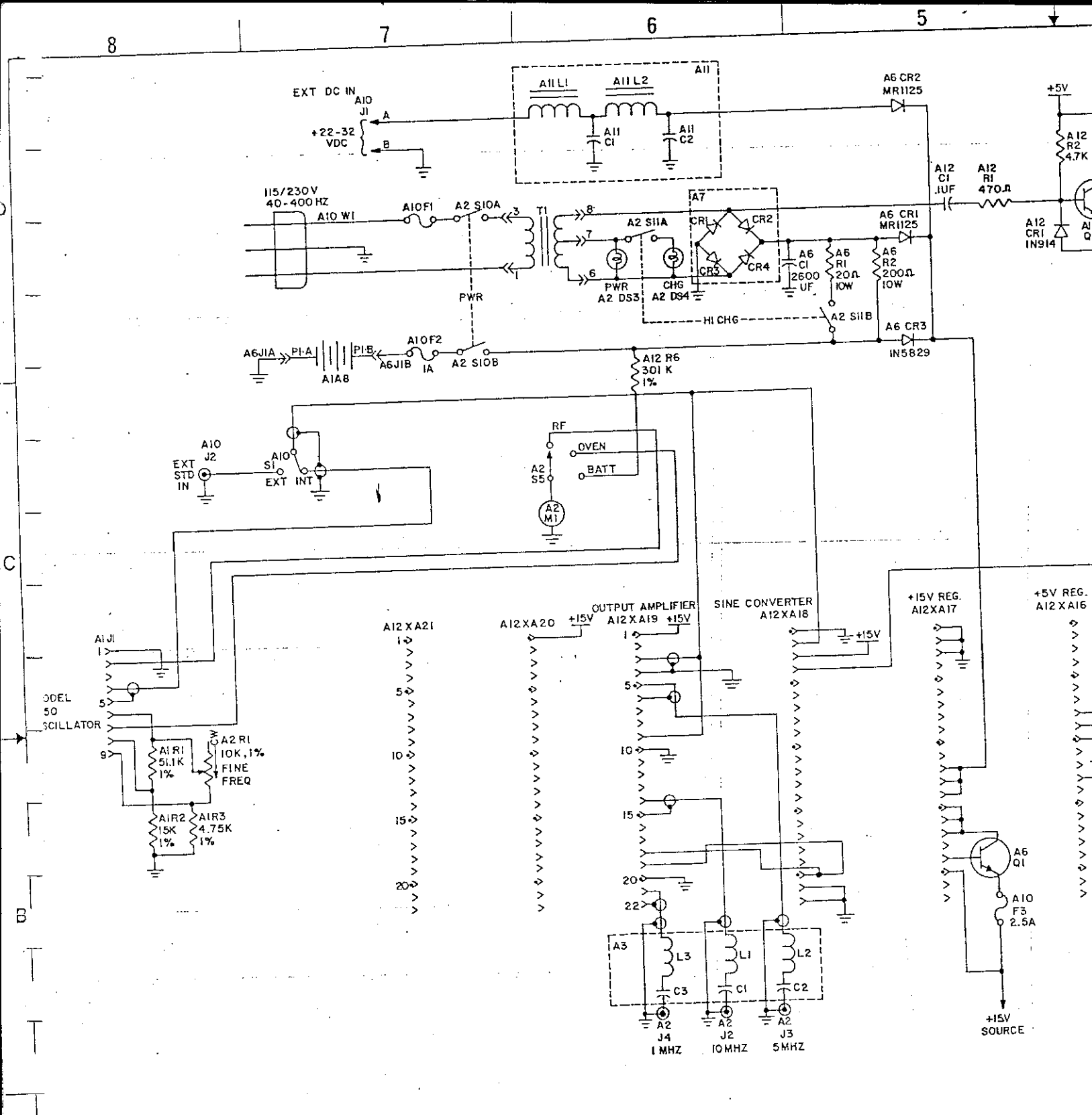

NOTES:

1. ALL RESISTORS 1/4W 10% UNLESS OTHERWISE SPECIFIED.
2. A12Q1 AND A12Q2 ARE 2N3904.
3. A6Q1 IS AN MJE3055.

MANUAL PARTS LIST MODEL 12100-03 24 OCT 8[illegible]

ASSEMBLY CRYSTAL CLOCK, MODEL 12100-03
ASSEMBLY NUMBER 32196206-3
REFERENCE DESIGNATOR PREFIX
QUANTITY EA

REF DES	PART DESCRIPTION	AUSTRON PART	CEG PART	FIC
	PCB ASSY, EXTENDER	10393765		24672
	CLAMP, AN3057-6	551013-0006	AN3057-6	81352
	CONN, STRAIGHT 3 SOCKET CONTACT	551106-0017	MS3106A-14S-1S	96906
	TUNING WAND	901000-8605	8605	26018
1	FINAL ASSY, MODEL 12100-03	27196208-3		24672

ASSEMBLY FINAL ASSY, MODEL 1210D-03
ASSEMBLY NUMBER 27196208-3
REFERENCE DESIGNATOR PREFIX 1
QUANTITY EA

REF DES	PART DESCRIPTION		AUSTRON PART	MFG PART	FIC
A1	NOT USED				
A2	PANEL ASSY, FRONT		10996193-3		24672
A3	PCB ASSY, FINAL FILTER		10397355-1		24672
A4	PCB ASSY, TOD DISPLAY		10396186		24672
A5	PCB ASSY T.O.D. CONTROL		10396188		24672
A6	PLATE ASSY (A6)		11096211		24672
A7	PC BOARD ASSY-BRIDGE		10394664		24672
A8	BATTERY PACK ASSY		12096212		24672
A9	XTLOSC, 1150 (70-85 DEG)		30296818		24672
A10	PANEL ASSY, REAR		10996195		24672
A11	PCB ASSY, DC FILTER		10396200		24672
A12	PCB ASSY, INTERCONNECT		10396769		24672
A13	PC BOARD ASSY-PULSE AMPLIFIER		10394595-3		24672
A14	PC BOARD ASSY, DIVIDER		10396614-1		24672
A15	PCB ASSY, TIME SYNC		10394618		24672
A16	PC BOARD ASSY, +5 VDC REGULATOR		10394607		24672
A17	PCB ASSY, +15 VDC REGULATOR		10396197		24672
A18	PCB ASSY, SINE CONVERTER		10396025-1		24672
A19	PCB ASSY 10,5,1MHZ OUTPUT AMP		10397342		24672
A20	NOT USED				
A21	NOT USED				
MP1	COVER, FRONT		00794304		24672
MP2	COVER-INSTRUMENT		00796209-1		24672
MP3	COVER-INSTRUMENT		00796209-2		24672
MP4	BAR RECTANGULAR		01096753		24672
MP5	.171X1/4X1/2	SPACER ROUND	520830-0005	9228-SS171-0	06540
MP6	.171X1/4X1/2	SPACER ROUND	520830-0005	9228-SS171-0	06540
MP7	.171X1/4X1/2	SPACER ROUND	520830-0005	9228-SS171-0	06540
MP8	.171X1/4X1/2	SPACER ROUND	520830-0005	9228-SS171-0	06540
MP9	WASHER, PRELOAD		02096741		24672
MP10	WASHER, PRELOAD		02096741		24672
MP11	WASHER, PRELOAD		02096741		24672
MP12	WASHER, PRELOAD		02096741		24672

ASSEMBLY FINAL ASSY, MODEL 12100-03 (CONT)
ASSEMBLY NUMBER 27196208-3
REFERENCE DESIGNATOR PREFIX 1
QUANTITY EA

REF DES	PART DESCRIPTION	AUSTRON PART	MFG PART	FIC
MP14	SHOCK MOUNT BUSHING	520205-0005	10R4-1501R	14519
MP15	SHOCK MOUNT BUSHING	520205-0005	10R4-1501R	14519
MP16	SHOCK MOUNT BUSHING	520205-0005	10R4-1501R	14519
MP17	SHOCK MOUNT BUSHING	520205-0005	10R4-1501R	14519
MP18	SHOCK DRIVE WASHER	520205-0010	10R41500	14519
MP19	SHOCK DRIVE WASHER	520205-0010	10R415[illegible]	14519
MP20	SHOCK DRIVE WASHER	520205-0010	10R415[illegible]	14519
MP21	SHOCK DRIVE WASHER	520205-0010	10R415[illegible]	14519
MP22	BUMPER, RUBBER W/HARDWARE	520210-2198	2198	83330
MP23	BUMPER, RUBBER W/HARDWARE	520210-2198	2198	83330
MP24	BUMPER, RUBBER W/HARDWARE	520210-2198	2198	83330
MP25	BUMPER, RUBBER W/HARDWARE	520210-2198	2198	83330

7.5.2 Divider -- The Divider PCB (A14) contains provisions for four cascade dual-decade dividers, as well as a divide-by-six stage.

7.5.2.1 The 1 MHz TTL output from the Time Sync card is divided (by means of three cascade dual-decade dividers) to 1 PPS. This and other intermediate rates are used by the TOD Control (A5), the Time Sync (A15), and the Pulse Amplifier (A13).

7.5.2.2 The fourth dual-decade divider and the divide-by-six stage are used to generate the 1 PP10S, 1 PP100S, and 1 PPM respectively. These are special options, and used on the 10396614-1 assembly only.

7.5.2.3 The Hex Driver (U6) is used to buffer the slew rates applied to the front panel slew rate switch (1A2S9). This prevents the capacative loading of the switch from giving the dividers a false count.

7.5.2.4 The $R_{\emptyset}$ signal originates on the Time Sync card (A15), and is used to reset all dividers when synchronizing the clock to external source.

REVISIONS				
ZONE	LTR	DESCRIPTION	DATE	APPD
	—	RELEASED	4-24-79	[illegible]
	A	ADDED U6 TO ECTH & SCREEN PER ECO. #3037	9-13-79	[illegible]
	B	U6 PIN 10 WAS 8; U6 PIN 12 WAS 10; PER ECO 3177	11-14-79	ROB

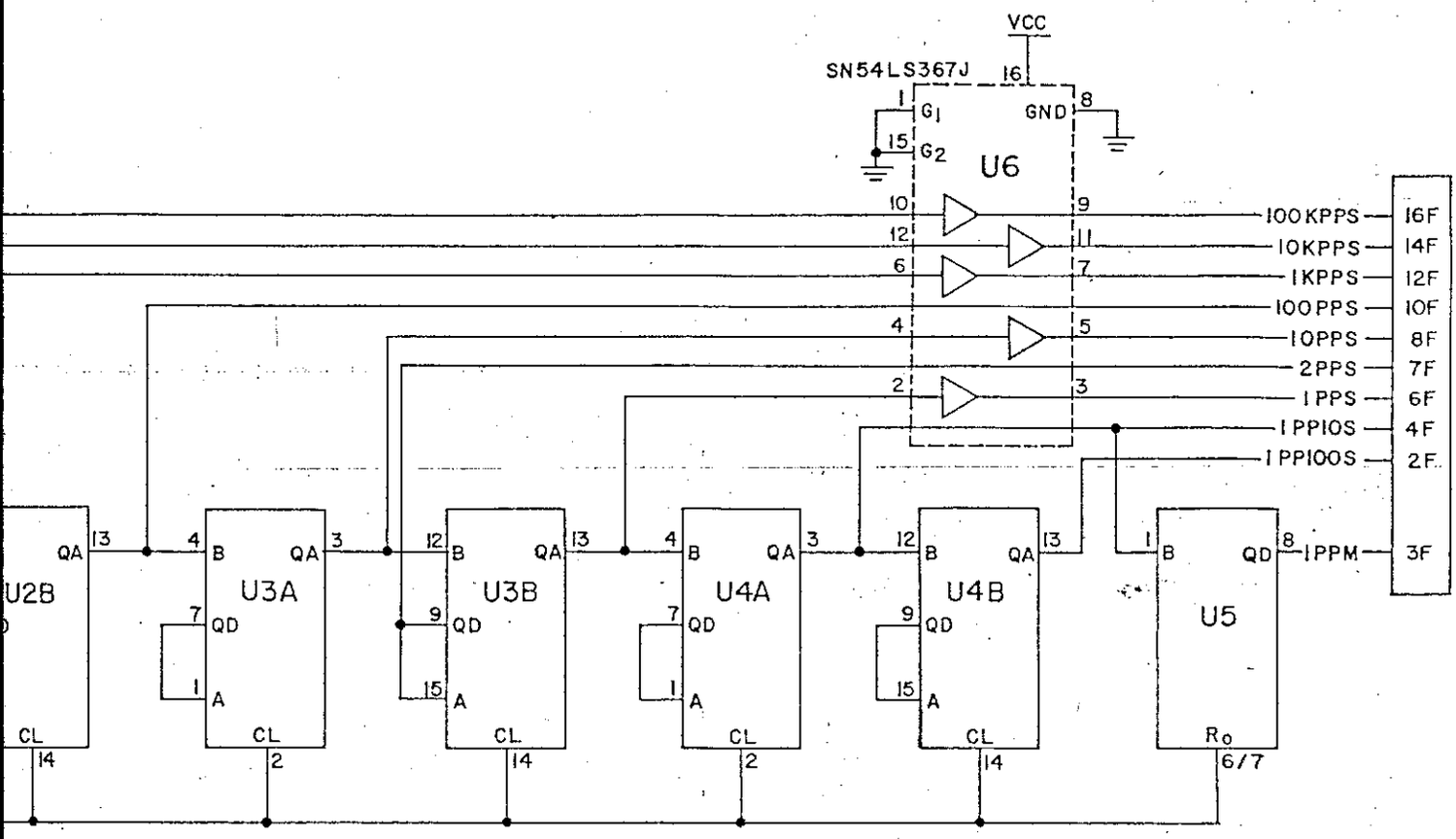

VCC

C2-C5
.01

03 96614-*	1210D-03	A14	7-15
NEXT ASSY	USED ON	REF DES	FIG NO
APPLICATION			

TOLERANCES
UNLESS OTHERWISE SPECIFIED

DECIMALS	FRACTIONS	ANGLES

MATERIAL:
N/A

ENGR	[illegible]	5/2/79
CHECK	R. Barker	4-24-79
DRFTSMN	LDP	4-19-78

AUSTRON INC.
AUSTIN, TEXAS

SCHEMATIC, DIVIDER

SIZE	CODE IDENT NO		
3	24672	123 96615	B

SCALE N/A | SHEET 1 OF 1

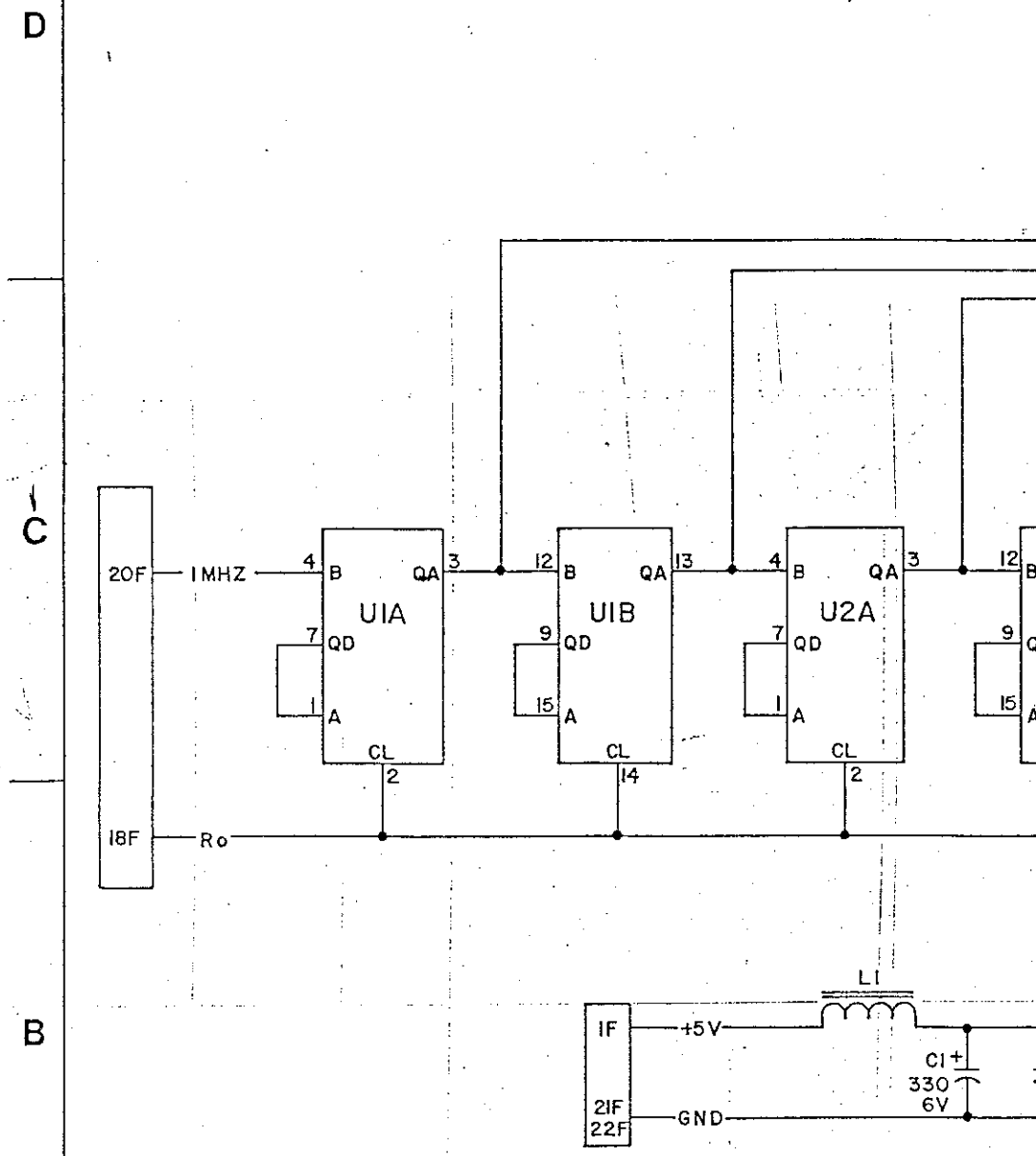

3. U4, U5 AND C5 ARE USED ON 103 96614-1 ONLY.
2. U5 IS A SN54LS92J -VCC/5 GND/10.
1. U1 THRU U4 ARE SN54LS390J -VCC/16 GND/8.

NOTES:

E	REVISED PARTS LIST PER ECO.
F	ADDED FEED-THRU PER ECO 3

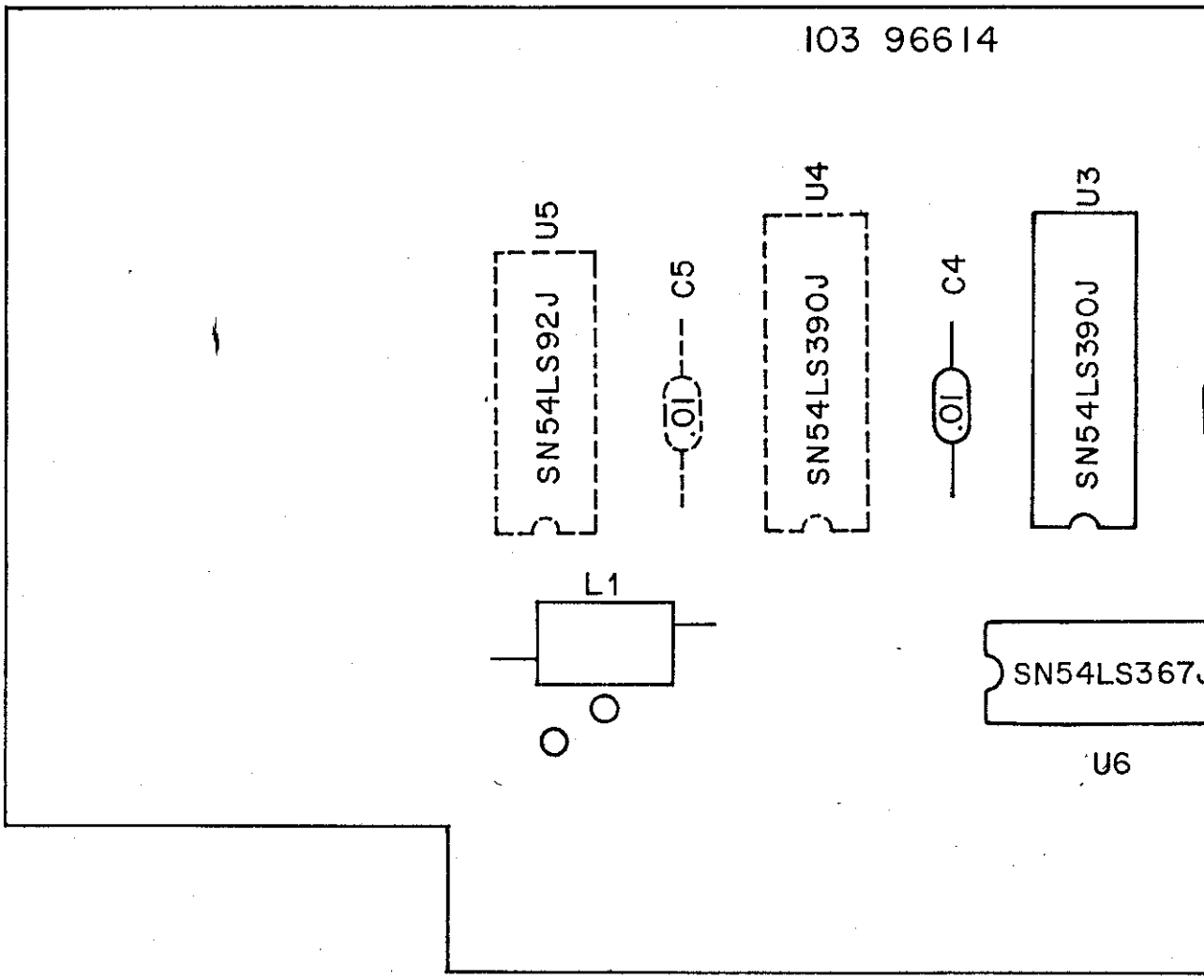

* 1. U4, U5, AND C5 ARE USED ON 103 96614-1 ONLY.

NOTES:

271 96208-3	1210D -03
NEXT ASSY	USED ON
APPLICAT	

3204	1-25-80	RDB
98	2-18-80	RDB

REVISIONS

ZONE	LTR	DESCRIPTION	DATE	APPD
	—	RELEASED	4-24-78	RDB
	A	ECO. 2376 PARTS LIST CHANGE	5-17-78	RDB
	B	ADDED FEED-THRU'S TO SCREEN ECO. 2712	3-16-79	RDB
	C	REVISED PARTS LIST PER ECO. 2884	4-16-79	RDB
	D	REVISED ETCH & SCREEN PER ECO. 3037	9-13-79	JCV

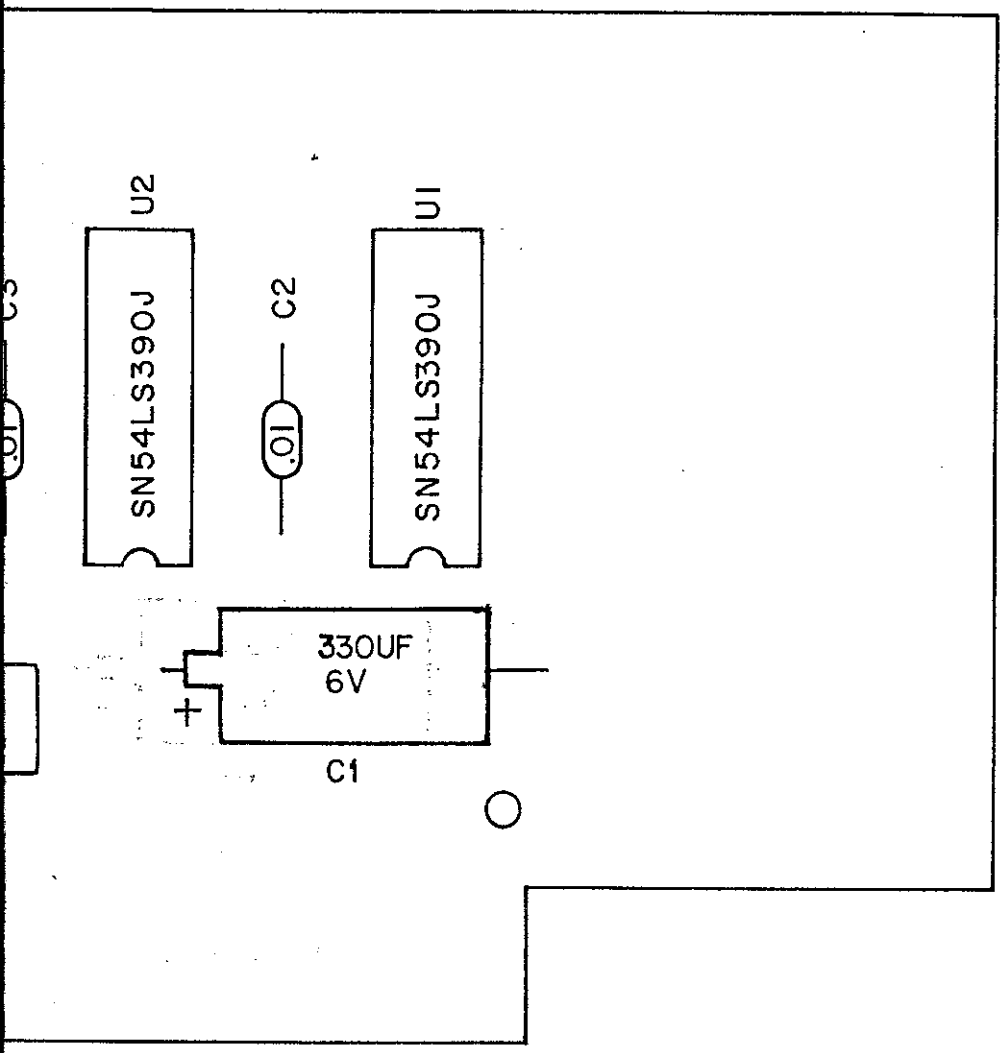

A14	7-16
REF DES	FIG NO

TOLERANCES
UNLESS OTHERWISE SPECIFIED

DEC	FRAC	ANG

MATERIAL:
N/A

ENGR	RDB	5-2-78
CHECK	RDB	4/24/78
DRFTMN	LDP	4-20-78

AUSTRON INC
AUSTIN, TEXAS

PC BOARD ASSY, DIVIDER

SIZE	CODE IDENT NO		
2	24672	103 96614 - *	F

SCALE N/A | SHEET 1 OF 1

MANUAL PARTS LIST MODEL 12100-03 24 OCT 84

ASSEMBLY PC BOARD ASSY, DIVIDER
ASSEMBLY NUMBER 10396614-1
REFERENCE DESIGNATOR PREFIX 1A14
QUANTITY EA

REF DES	PART DESCRIPTION	AUSTRON PART	MFG PART	FIC
C1	330 UF 6V 10 CAP TANT	608013-0337	CS13BB337K	81349
C2	CAP CERA AXL X7R .01 UF 100V 10%	601205-0103	CK12BX103K	81349
C3	CAP CERA AXL X7R .01 UF 100V 10%	601205-0103	CK12BX103K	81349
C4	CAP CERA AXL X7R .01 UF 100V 10%	601205-0103	CK12BX103K	81349
C5	CAP CERA AXL X7R .01 UF 100V 10%	601205-0103	CK12BX103K	81349
L1	WIDEBAND CHOKE	751102-0000	VK20010/3B	02114
U1	IC DUAL DECADE COUNTER	703SN54LS390	SN54LS390J	01295
U2	IC DUAL DECADE COUNTER	703SN54LS390	SN54LS390J	01295
U3	IC DUAL DECADE COUNTER	703SN54LS390	SN54LS390J	01295
U4	IC DUAL DECADE COUNTER	703SN54LS390	SN54LS390J	01295
U5	IC DIVIDE BY TWELVE COUNTER	703SN54LS92J	SN54LS92J	01295